MASADA

江苏政田重工股份有限公司
Jiangsu Masada Heavy Industries Co., Ltd.

地址：江苏省南通市崇川区深南路897号
电话：(86) 0513-8530 6822 8530 6823 8530 6825
传真：(86) 0513-8530 6811
邮箱：sales@masada.cn
网址：www.masada.cn

Address:NO.897 Shennan Road, Chongchuan District,Nantong
TEL：(86) 0513-8530 6822 8530 6823 8530 6825
FAX：(86) 0513-8530 6811
E-mail：sales@masada.cn
Website：www.masada.cn

MASADA

www.masada.cn

政田 MASADA

政田—三菱 锚绞机 船用起重机 舵机 液压马达

MASADA-MITSUBISHI WINDLASS & WINCH
DECK CRANE STEERING GEAR HYDRAULIC MOTOR

COMPANY PROFILE
企业简介

始建于2005年的江苏政田重工股份有限公司，位于中国江苏省南通市崇川区，占地面积22.3万平方米，总投资12亿元，主要生产船用起重机、锚绞机，舵机，液压马达，液压泵以及海洋工程设备等产品。是日本三菱重工在中国唯一授权生产船用克令吊、锚绞机、舵机、液压马达及液压泵的中外合资企业，是中国能够整体打包提供船舶甲板配套设备的专业服务商。

公司全面引进三菱重工先进技术和精益生产管理模式，建立健全了较稳定的运营体系和质量管理体系，目前公司拥有研发人员146人，授权有效专利47件。从事船舶甲板机械制造18年来，已与全球50多家大型造船企业和著名船东建立了良好的合作关系。

Founded in 2005, Jiangsu Masada Heavy Industries Co., Ltd is located in Chongchuan district, Nantong City, Jiangsu Province, China. It covers an area of 223,000 square meters with a total investment exceeding 1.2 billion yuan.Jiangsu Masada mainly manufactures deck cranes,deck machinery, steering gear, hydraulic motors, and pumps, as well as offshore engineering equipment.As a Chinese-foreign joint venture, it is the sole licensee of Mitsubishi Heavy Industries (MHI)in China to manufacture deck cranes, deck machinery, steering gear, hydraulic motors, and pumps, which is a specialized server company that can provide the whole package of deck equipment.

Jiangsu Masada has followed the advanced technology and manufacturing management that come from MHI.At present,the company has 146 R&D and 47 authorized valid patents.Engaged in ship deck machinery manufacturing for 18 years,Masada has established good cooperative relations with more than 50 large shipbuilding enterprises and famous shipowners all over the world.

CORPORATE CULTURE
企业文化



企业愿景: 成为世界一流 的船舶海洋配套企业
Enterprise vision: To become a world-class marine ship supporting enterprise
企业精神：传承 创新 务实 奋进
Enterprise spirit: Inheritance Innovation Pragmatism Endeavor
企业使命：共同发展 共创繁荣
Enterprise mission： Common development, create prosperity

与日本三菱重工携手合作
为客户提供高品质的产品和优质的全球售后服务。
Provide customers with high-quality products
And excellent after-sales service worldwide in collaboration with Japan Mitsubishi Heavy Industries

品质管理系统

INTRODUCTION OF CORPORATE QUALITY CONTROL SYSTEM

High quality manufacturing | 高质量制造

■ 江苏政田-三菱克令吊，锚绞机和舵机，在三菱重工全面技术支持下进行设计同时根据客户需求不断创新。

Jiangsu Masada-Mitsubishi Deck Crane, Winches and steering gears are designed with full technical support from MHI and are constantly innovated to meet the needs of our customers.

三菱重工全面支持政田设计制造

MHI full support to Masada Design & Manufacture

国家级专精特新“小巨人”企业

Nationally recognized high-tech enterprises

■ 高品质是政田人不懈的追求。

High quality is the unremitting pursuit of Masada people.

高端检测设备

High tech testing equipment

每日质量会议

Daily QC meeting

■ 精细化生产管理。

Refined production management.

6S现场管理

6S management

管理看板

Management Kanban

■ 优秀的销售服务团队，成熟的全球售后网络体系。

Excellent sales team and mature global after-sales network system.

销售服务团队

Sales Service Team

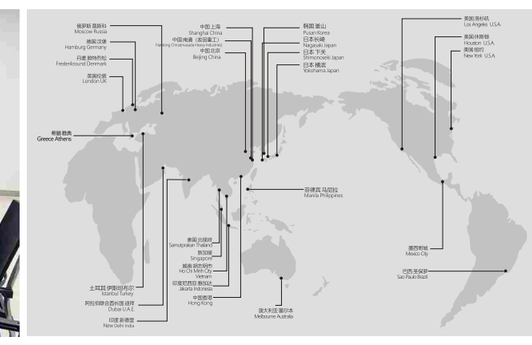

全球销售售后服务网络

Global sales and after-sales service network

DECK CRANE 船用起重机

江苏政田—三菱 船用起重机
JIANGSU MASADA-MITSUBISHI DECK CRANE

DIMENSION | 外形参数

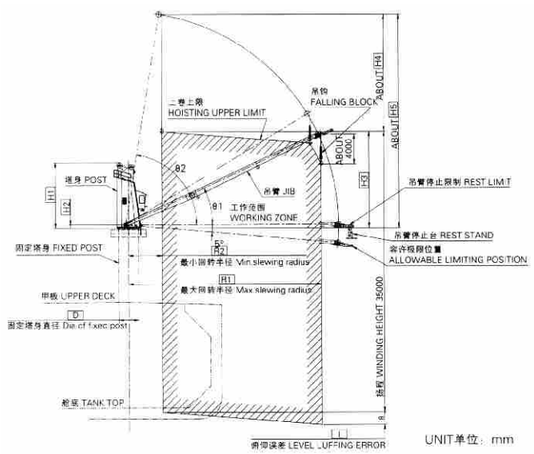

UNIT 单位：mm

规格/TYPE	3022	3024	3026	3028	3030	3626	3628	3630
R1	22000	24000	26000	28000	30000	26000	28000	30000
R2	4000	4500	4500	5000	5000	4500	5000	5000
Θ1	25°	20°	20°	25°	25°	20°	20°	20°
Θ2	80°	80°	81°	81°	81°	81°	80°	81°
H1	8500	8500	8900	9250	9450	9100	9250	9600
H2	477	477	487	557	557	567	567	585
H3	8200	6900	7750	10820	11130	7630	10760	12000
H4	16300	18800	20150	20330	22270	20270	21000	20120
H5	24500	25700	27900	31150	33400	27900	31760	32120
L	1420	1650	1750	1160	560	1600	450	665
D	2665	2665	2665	2850	2850	2850	2850	2850

HYDRAULIC CIRCUIT DIAGRAM | 液压回路

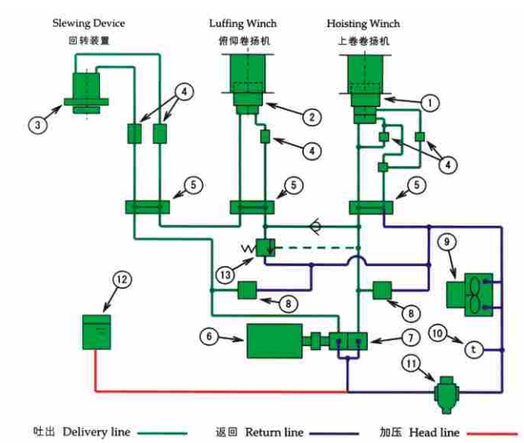

No.	名称	Name
1	上卷用液压马达	OIL MOTOR FOR HOISTING WINCH
2	俯仰用液压马达	OIL MOTOR FOR LUFFING WINCH
3	回转用液压马达	OIL MOTOR FOR SLEWING DEVICE
4	反平衡阀	COUNTER BALANCE VALVE
5	控制阀	CONTROL VALVE
6	电动机	ELECTRIC MOTOR
7	油压泵	OIL PUMP
8	安全阀	RELIEF VALVE
9	油冷机	OIL COOLER
10	温控开关	THERMO SWITCH
11	过滤器	OIL FILTER
12	油箱	HEAD TANK
13	卸载阀（溢流阀）	UNLOADING VALVE

MAIN PARTS | 主要构造

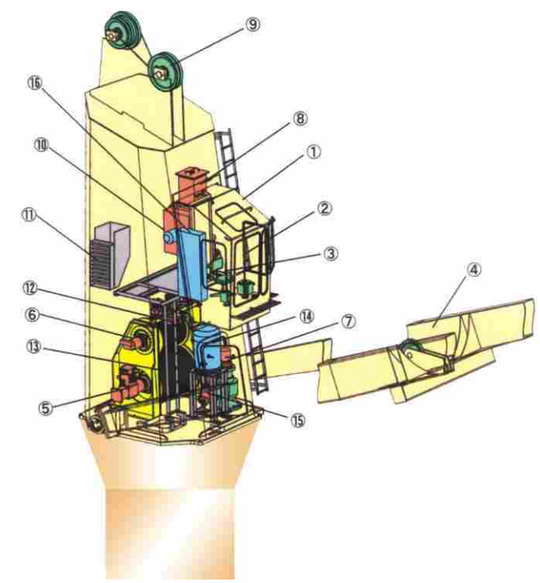

1.驾驶室	1.Cabin
2.回转、俯仰用控制杆	2.Control lever for slewing and luffing
3.上卷用控制杆	3.Control lever for hoisting
4.吊臂	4.Jib
5.液压马达（上卷用）	5.Oil motor for hoisting winch
6.液压马达（俯仰用）	6.Oil motor for luffing winch
7.液压马达（回转用）	7.Oil motor for slewing device
8.油箱	8.Head tank
9.滑轮	9.Sheave
10.油冷机	10.Oil cooler
11.通风口	11.Air duct
12.俯仰卷扬机	12.Luffing winch
13.上卷卷扬机	13.Hoisting winch
14.电动机	14.Electric motor
15.液压泵	15.Oil pump
16.控制面板	16.Control panel

FEATURES | 特 征

■ 可靠性高 High Reliability

1.机械制动系统+液压制动系统双保险，即使在液压马达或泵有最坏情形发生时，除了机械系统制动之外，反平衡液压阀发挥作用，控制并停止起吊动作，保证货物不会掉落。

Mechanical brake system+ hydraulic brake system.
In addition to the mechanical brake system, hydraulic valve block is also used for security. Even when the worst happens to hydraulic motor or pump, the goods will not fall through the function of counter-balance valve.

2.机械连杆系统易操作、易维护、安全可靠

Mechanical linkage system simple and trouble-free, used in the operation and maintenance.

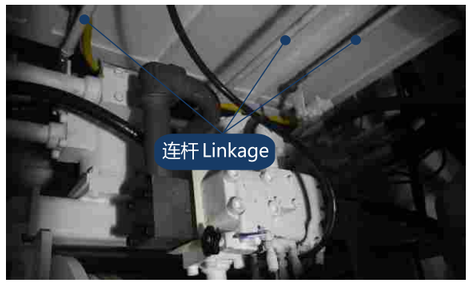

3.塔身顶部、吊臂中间、吊臂前端，三点钢丝绳有效控制吊臂振动，确保起重机稳定。

The top of the tower, the jib center and the front end of jib, these three positions support the luffing rope. Vibration of the jib is controlled within the minimum range, so the crane has a good stability.

■ 易于维护 Easy to Maintain

1.液压系统简单

Simple hydraulic system

2.主要的设备位于起重机较低位置

Major equipment on the crane at the lower position

3.所有滑轮均由轴承座固定，轴承座分为两部分，靠螺栓拧紧，便于拆装更换磨损滑轮。

All pulleys are fixed by bearing seat which is divided into two parts and can be fastened by bolts. Damaged pulleys can be removed and replaced easily.

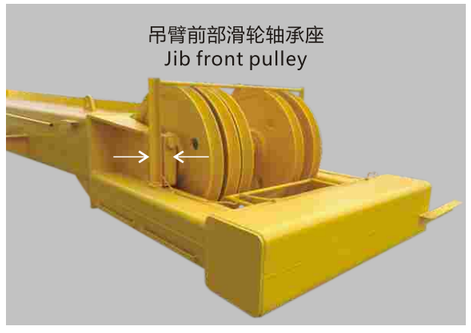

■ 速度特性 Hoisting Speed Characteristic Curve

负载量不等时，自动调节起吊速度快慢

Adjusting the hoisting speed under different load automatically

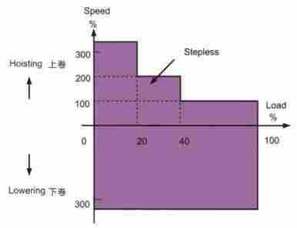

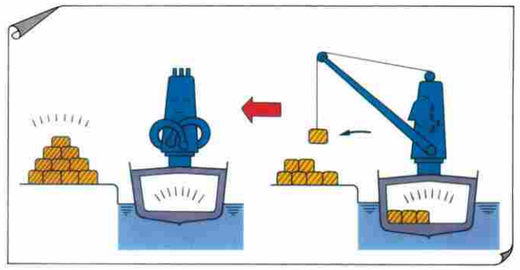

■ 装卸周期精准、迅速 DUTY CYCLE OF CARGO HANDLING

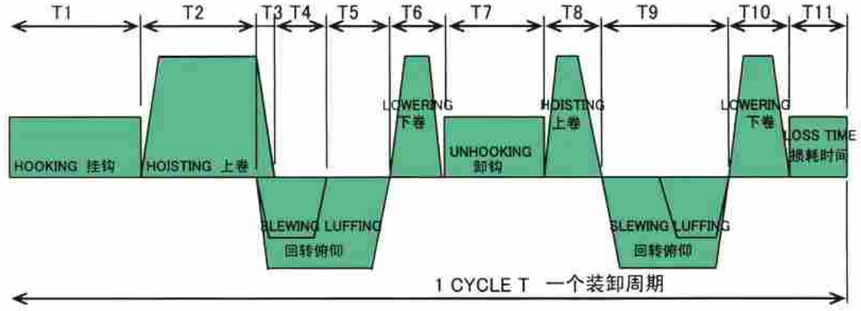

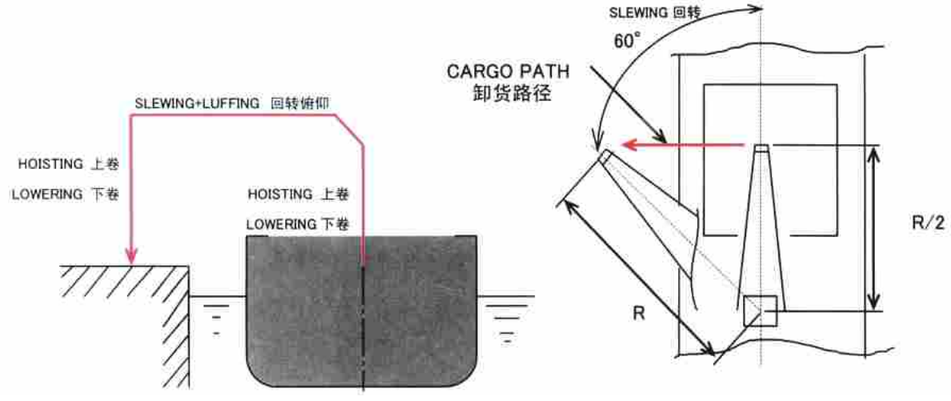

IMPORTED KEY PARTS | 关键进口零部件

引进日本及国际一流水平厂家制造的关键零部件
Introduction of key parts and components from Japan and international first-class manufacturers

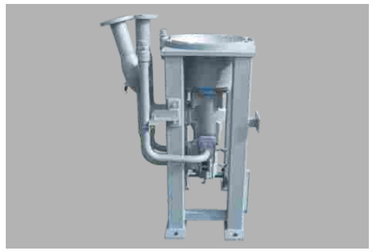
泵 Pump


减速装置 Reduction Gear

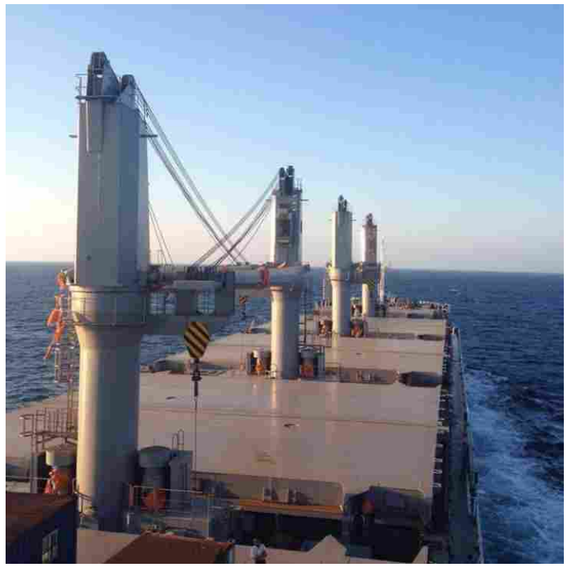

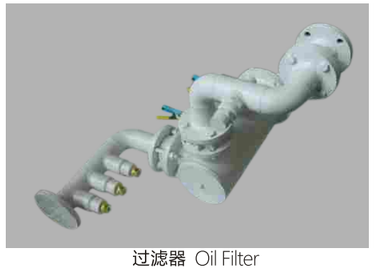
过滤器 Oil Filter

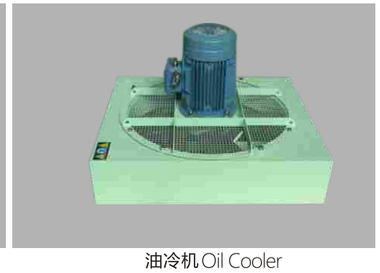
油冷机 Oil Cooler


温控开关 Thermo Controller


安全阀 Relief Valve

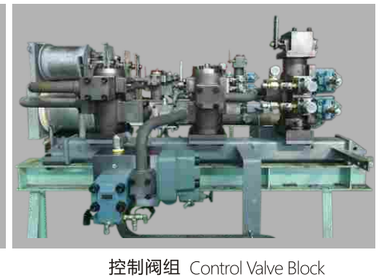
控制阀组 Control Valve Block


回转轴承 Turn Table Bearing

NEW TECHNOLOGY & CUSTOMIZATION | 新技术与定制

■ 数据记录（数据记录标准/数据记录升级版）DATA LOGGING (Data logging standard / Data logging advance)

通过PCL系统（可编程逻辑控制器），克令吊动作和性能能迅速精确记录和评估。
With PLC (programmable logic controller) system, deck crane's motion and performance can be recorded and assessed quickly and precisely.




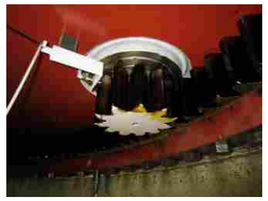

数据记录标准
DATA LOGGING STANDARD

- 计时器（起升、俯仰、回转）
  Running hour (hoisting/luffing/slewing)
- 操作模式（吊钩/抓斗模式）
  Operation mode (hook or grab mode)
- 启动安全装置（限位开关）
  Activation of safety devices (limit switch)

数据记录升级版
DATA LOGGING ADVANCE

可 选
OPTION

- 油压测量
  Oil pressure measurement
- 速度测量
  Speed measurement
- 自检程序
  SELF-TEST MODE

■ 定制稳定操作 CUSTOMIZATION FOR STABLE OPERATION

根据积累经验和技术诀窍，我们准备了个性化菜单，所谓智能升级。
Based on accumulated experience and technical know-how, we prepared customize menu called SMART UP-GRADE.

A 驾驶室压力指示器 Pressure indicator in cabin
便于检验性能
For easy check of performance

B 高循环配置"控制阀" High cycle corresponding "control valve"
应对频繁上下动作的高持续时间
High duration against frequent up & down motion

C 旁路系统滤器 OFF-LINE Filter
由纯系统油的纯驱动
For pure drive by pure system oil

D 检测摄像头 Monitoring camera
监测操作人员的操作
To check operation by operator

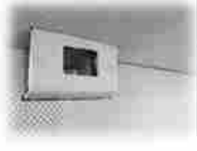


江苏政田—三菱 船用起重机
JIANGSU MASADA-MITSUBISHI DECK CRANE

Main Specification and Parameter | 主要产品规格和技术参数

液压克令吊（标准型）Hydraulic deck crane (Standard speed)

规格 Type	Hoisting load t	Working radius		Winding height(m)	Hoisting speed		Lowering speed m/min	Luffing speed sec	Slewing speed rpm	Electric motor		Total weight Ton
		Max(m)	Min(m)		Load(t)	Speed m/min				Cont(KW)	Intermittent Ed15%(KW)	
3022	30	22	4	35	30/12/5	18.5/37/63	63	41	0.75	105	240	35
3024	30	24	4.5	35	30/12/5	18.5/37/63	63	48	0.7	105	240	36
3026	30	26	4.5	35	30/12/5	18.5/37/63	63	49	0.6	105	240	40
3028	30	28	5	35	30/12/5	18.5/37/63	63	50	0.55	105	240	45
3030	30	30	5	35	30/12/5	18.5/37/63	63	52	0.5	105	240	48
3626	36	26	4.5	35	36/14/5	16/32/55	55	54	0.6	105	240	45
3628	36	28	5	35	36/14/5	16/32/55	55	55	0.55	105	240	47
3630	36	30	5	35	36/14/5	16/32/55	55	58	0.45	105	240	50
4030	40	30	4.5	50	40/16	18/36	36	95	0.45	132	320	62

液压克令吊（高速型）Hydraulic deck crane (High speed)

规格 Type	Hoisting load t	Working radius		Winding height(m)	Hoisting speed		Lowering speed m/min	Luffing speed sec	Slewing speed rpm	Electric motor		Total weight Ton
		Max(m)	Min(m)		Load(t)	Speed m/min				Cont(KW)	Intermittent Ed15%(KW)	
3022	30	22	4	35	30/12/5	25/50/63	63	41	0.75	132	320	35
3024	30	24	4.5	35	30/12/5	25/50/63	63	48	0.7	132	320	36
3026	30	26	4.5	35	30/12/5	25/50/63	63	49	0.6	132	320	40
3028	30	28	5	35	30/12/5	25/50/63	63	50	0.55	132	320	45
3030	30	30	5	35	30/12/5	25/50/63	63	52	0.5	132	320	48
3626	36	26	4.5	35	36/14/5	22/44/55	55	54	0.6	132	320	45
3628	36	28	5	35	36/14/5	22/44/55	55	55	0.55	132	320	47
3630	36	30	5	35	36/14/5	22/44/55	55	58	0.45	132	320	50

电动克令吊 Electric deck crane

规格 Type	Hoisting load t	Working radius		Winding height(m)	Load(t)	Hoisting speed m/min	Lowering speed m/min	Slewing speed rpm	Electric motor			Total weight Ton
		Max(m)	Min(m)						Hoisting (KW)	Luffing (KW)	Slewing (KW)	
3630	36	30	5	35	36 12	23 45	54 67	0.6 0.8	100	55	75	55

36T30M变频电动克令吊，船东Lemissoler在新时代船厂首制船
36T30M VFD DECK CRANE, THE LEADING SHIP BUIDLING IN NEW TIMES SHIPYARD FOR SHIPOWNER LEMISSOLER

Electric Deck crane feather | 电动克令吊特点

高效 SUPERIOR EFFICIENCY

采用新VFD(变频驱动)系统和高效率电机/变频器，并且多余电力可以再生。
这个最新的系统可以减少能源消耗，与电动液压克令吊相比，节省能源40%。

Latest VFD (Variable Frequency Drive) system & high-efficiency motor / inverter are applied, and excess electric power can be regenerated.Energy consumption can be reduced by this latest system*.
* 40% less energy compare with electro-hydraulic deck crane.

可靠性高，维修方便
HIGH RELIABILITY & EASY MAINTENANCE

与电动液压式克令吊相同，主要组件位于基础层，方便进入和维护。
另外，驱动单元(电机、减速机等)是非常简单的结构，实现更高可靠性。

As same as electro-hydraulic deck crane, main components are located on base floor for easy access & maintenance.
In addition, structure of drive unit (motor,reduction gear, etc.) is very simple which achieved higher reliability.

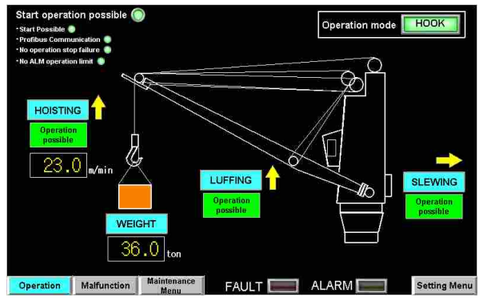

人性化/方便访问
USER-FRIENDLY / EASY ACCESS FOR CONDITION

用户可以通过“触摸传感式显示屏”来访问日志数据。
所有必要的数据都可以显示在显示器上，方便用户掌握克令吊的状态，当出现故障时，用户能快速查找故障原因。

User can access to logging data with “touch sensor type display”.
All necessary data can be shown on the display which helps users to grasp condition of deck crane easily, and in case of trouble, user can access cause of trouble quickly.

STIFF BOOM CRANES/Range from 100 up to 9000KNM ｜固定臂吊机/范围从100至9000KNM

4T8.1M Hydraulic Crane


10T18M Hydraulic Crane

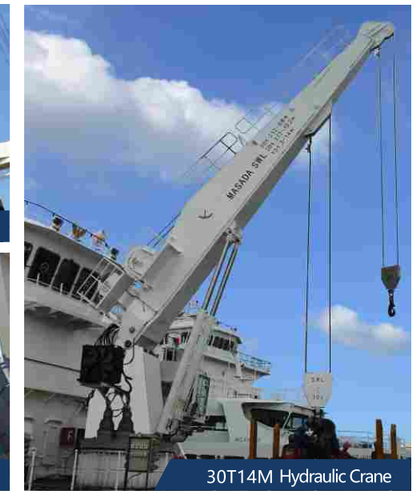
30T14M Hydraulic Crane


6.4T9M&3.2T14M HYDRAULIC CRANE


10T21M Hydraulic Crane

■ 液压吊机主要产品规格和技术参数

Main specification and parameter for Hydraulic Crane

规格 Type	额定起重载荷 SWL(t)	最大幅度 (m)	起升速度 (m/min)	回转速度 (r/min)	电机功率 (KW)	倾覆力矩 (KN.m)	垂直力 (KN)	主要尺寸 长A(mm)	宽B(mm)	高C(mm)	筒体直径D(mm)	吊机重量 Crane Weight (KG)
1T×9M	1	9	10	0.6	7.5	180	50	9800	1800	3800	700	3100
1T×10M	1	10	12	0.5	15	226	47	10350	2000	4100	700	3100
1T×12M	1	12	10	0.5	15	241	49	13000	2000	4200	1000	3500
1.5T×6M	1.5	6	15	0.5	11	223	43	6300	1300	4000	700	3100
2T×4M	2	4	18	0.5	15	310	55	5000	1500	3800	920	2700
2T×8.1M	2	8.1	10	0.5	15	300	70	9000	2600	4500	1080	4100
2T×10M	2	10	12	0.5	22	470	60	11500	2400	4700	1000	4350
2T×12.5M	2	12.5	10	0.6	22	513	64	13500	2500	5100	1000	5080
2T×13M	2	13	10	0.5	22	704	95	14000	3100	5520	1000	6500
2T×15.5M	2	15.5	10	0.6	22	520	65	15500	2500	5100	1000	5980
2T×19.5M	2	19.5	10	0.5	22	1200	150	20150	2300	500	1225	8143
3T×6M	3	6	10	0.6	22	350	64	7100	2000	4950	1000	4800
3T×7M	3	7	10	0.6	22	380	75	8100	2000	4950	1080	5100
3T×8M	3	8	15	0.5	22	410	81	9200	2100	4900	970	5100
3T×14M	3	14	12	0.5	22	620	91	15400	2500	5100	1400	6500
3.5T×12M	3.5	12	10	1	30	620	90	13000	2500	5100	1250	6500
3T×19.5M	3	19.4	10	0.5	22	1300	160	20150	2300	500	1225	8943
3.2T×10M	3.2	10	10	0.8	18.5	550	80	11000	2100	5095	1080	6469
4T×8.1M	4	8.1	10	0.5	22	450	85	9200	2200	4900	1080	5200
4T×10M	4	10	10	0.8	18.5	650	90	11000	2100	5095	1080	6469
4T×15.5M	4	15.5	10	0.6	30	1500	183	17000	3000	5100	1400	9400
4T×7M	4	7	12	0.5	22	630	91	8100	2100	4900	1250	5100
4T×13M	4	13	10	1	30	1300	150	14000	2200	4900	1250	5600
5T×13M	5	13	10	0.6	22	1350	164	15000	3100	4000	1420	8770
5T×16M	5	16	10	0.5	30	1500	150	17000	3200	5700	1400	11000
5T×17.5M	5	17.5	10/20	0.5	37	1700	190	19000	4000	3900	1420	11519
5T×26M	5	26	20	0.8	25	6900	560	28000	4000	4000	1960	38000
6.5T×13M	6.5	13	10	0.5	30	1500	180	15000	3200	6100	1400	10650
7.5T×8M	7.5	8	15	1	37	1280	152	10000	2200	3800	1420	10830
8T×14.5M	8	14.5	10	0.5	37	2000	300	16500	2500	6060	1600	12650
8T×25M	8	25	20	0.8	75	7500	710	27000	4000	4000	1960	38000
10T×16M	12	16	10	0.6	75	2500	415	18000	3300	7100	2000	21000

规格 Type	额定起重载荷 SWL(t)	最大幅度 (m)	起升速度 (m/min)	回转速度 (r/min)	电机功率 (KW)	倾覆力矩 (KN.m)	垂直力 (KN)	主要尺寸 长A(mm)	宽B(mm)	高C(mm)	筒体直径D(mm)	吊机重量 Crane Weight (KG)
10T×18M	10	18	10	0.6	60	2300	250	20000	3300	6200	1600	14500
10T×19M	10	19	10	0.6	60	2600	280	21000	3300	6200	1600	15200
10T×19M	10	21	10	0.6	75	3900	440	23000	3000	7100	2000	22000
10T×22.5M	10	22.5	10	0.6	75	3400	415	24000	3300	7100	2000	24000
10T×25M	10	25	10	0.6	75	4100	470	27000	3000	7100	2200	23000
12.5T×22M	12.5	22	12	0.6	75	4800	510	24000	3200	6500	2100	22345
15T×19M	15	19	10/20	1	90	4900	560	21000	3300	6500	2200	22000
15T×20M	15	20	10/20	1	90	4900	560	21000	3300	6500	2200	23000
15T×22.5M	15	22.5	12	0.8	90	5200	530	24000	3300	7000	2300	32000
15T×25M	15	25	10	0.8	90	6100	620	27000	3300	7000	2600	36000
15T×30M/29M	15	29	15/30	0.5	75	8000	780	25000	4500	6500	2245	52000
20T×20M	20	20	10/20	1	75	8300	650	23000	45000	6500	2245	37000
25T×21.2M	25	21.2	20	1	105	8200	980	32000/31000	5000	9100	2600	32500
30T×8.8M&15T×14M	30/20/15	8.8/10.8/14	10	0.6	105	6000	750	18000	5000	6500	2500	43000
40TX6.6M/3TX40M	40/3T	440	8	0.5	146	8816	979	43000	4800	7300	2500	58000

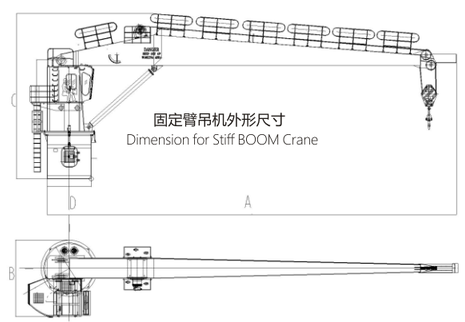


25T21.2M Hydraulic Crane

HOSE HANDLING CRANE | 软管吊机

5T 15M Hydraulic Hose Handling


12.5T 22M Hydraulic Hose Handling

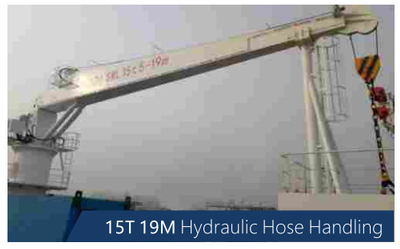
15T 19M Hydraulic Hose Handling


10T 22.4M Hydraulic Slewing Crane

■ 液压软管吊主要产品规格和技术参数

Main specification and parameter for Hydraulic Hose Handling Crane

规格 Type	额定起重载荷 SWL(t)	最大幅度 (m)	起升速度 (m/min)	回转速度 (r/min)	电机功率 (KW)	倾覆力矩 (KN.m)	垂直力 (KN)	主要尺寸				吊机重量 (kg)
								长 A(mm)	宽B(mm)	高C(mm)	筒体直径D(mm)	
5Tx18M	5	18	15/30	0.5	37	1700	190	18000	2600	4800	1420	12000
10Tx16M	10	16	10	0.6	75	2500	415	16000	3300	7100	2000	21000
*10t X 22.4M	10	22.4	10/20	0.5	-	-	-	24000	3800	4800	2000	20000
10Tx25M	10	25	10	0.6	75	4100	470	27000	3000	7100	2200	23000
15Tx19M	15	19	10/20	1	90	4900	560	21000	3300	6500	2200	22000
15Tx20M	15	20	10/20	1	90	4900	560	21000	3300	6500	2200	23000
15Tx22.5M	15	22.5	12	0.8	90	5200	530	24000	3300	7000	2300	32000
* 15t X 23.4M	15	23.4	10/20	0.5	-	-	-	25000	3800	5200	2110	30500
15Tx25M	15	25	10/20	0.7	90	6100	620	27000	3300	7000	2600	36000
*15t X 26.5M	15	26.5	10/20	0.5	-	-	-	28000	3100	5300	2110	32500
*20t X 18.6m	20	18.6	10/20	0.5	-	-	-	19600	3100	5100	2100	23500
* 20t X 20m	20	20	10/20	0.5	-	-	-	22000	4000	8300	-	25000
*20t X 20m钢丝绳变幅	20	20	10/20	0.5	-	-	-	22000	4000	5500	-	-

注 : 在标*的可选为三菱授权品牌。

Notes : Mitesubishi licensed brand is available with*mark.

15T19M液压软管吊机

15T 19M Hydraulic Hose Handling

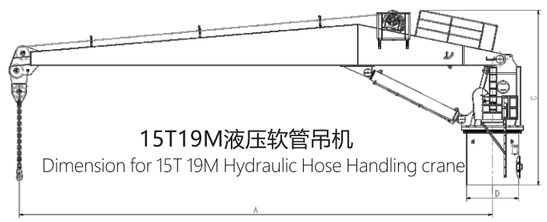

15T19M液压软管吊机

Dimension for 15T 19M Hydraulic Hose Handling crane

KNUCKLE BOOM & TELESCOPIC BOOM & KNUCKLE TELESCOPIC BOOM CRANES/Range from 180 up to 4500KNM 折叠臂、伸缩臂、折叠伸缩臂吊机/范围从180至4500KNM

5T18M KNUCKLE BOOM CRANE

2T6M KNUCKLE BOOM & TELESCOPIC BOOM CRANE


1.5T 12M Knuckle & Telescopic Boom Crane

3T11M Hydraulic Knuckle Boom Crane


2T9M Hydraulic Knuckle&Telescopic Boom Crane

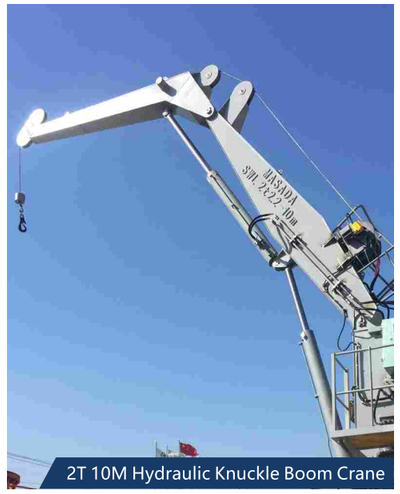

2T 10M Hydraulic Knuckle Boom Crane

■ 液压折臂起重机主要产品规格和技术参数
Main specification and parameter for Hydraulic Knuckle Boom Crane

规格Type	额定起重载荷 SWL(t)	最大工作半径 (m)	起升速度 (m/min)	变幅时间 (s)	回转速度 (r/min)	电机功率 (KW)	倾覆力矩 (KN.m)	垂直力 (KN)	主要尺寸				吊机重量 (kg)
									长A(mm)	宽B(mm)	高C(mm)	筒体直径D(mm)	
2Tx10M	2	10	12	90	0.7	30	470	60	11500	2000	3500	1000	3500
3Tx11M	3	11	12	90	0.7	30	570	71	11500	2000	3500	1250	4100
5T×16M	5	16	15	90	0.6	37	1400	170	16000	1855	5800	1230	10000
5T-23M	5	23	10/20	90	0.8	90	4000	500	2500	4500	4000	2050	34000
5T-18M	5	18	10/20	90	0.8	90	3600	500	2500	4500	4000	2050	30000

■ 液压伸缩起重机主要产品规格和技术参数
Main specification and parameter for Hydraulic Telescopic Boom Crane

规格Type	额定起重载荷 SWL(t)	最大工作半径 (m)	起升速度 (m/min)	变幅时间 (s)	回转速度 (r/min)	电机功率 (KW)	倾覆力矩 (KN.m)	垂直力 (KN)	主要尺寸				吊机重量 (kg)
									长A(mm)	宽B(mm)	高C(mm)	筒体直径D(mm)	
2.05Tx10M	2.05	10	15	15	1	30	470	60	11000	2000	4000	700	4500
5Tx10M	5	10	15	90	1.5	75	2000	220	22000	2500	6300	1600	25000
5T×26M	2	26	20	90	0.6	75	6900	560	29000	4500	7200	1960	3800

■ 液压折臂伸缩起重机主要产品规格和技术参数
Main specification and parameter for Hydraulic Telescopic & Knuckle Boom Crane

规格Type	额定起重载荷 SWL(t)	最大工作半径 (m)	起升速度 (m/min)	变幅时间 (s)	回转速度 (r/min)	电机功率 (KW)	倾覆力矩 (KN.m)	垂直力 (KN)	主要尺寸				吊机重量 (kg)
									长A(mm)	宽B(mm)	高C(mm)	筒体直径D(mm)	
1.5T×12M&（3T×6M）	1.5/3	6/12	12	90	0.7	30	570	71	13000	2000	3500	800	3670
1.5T×10M	1.5	10	12	70	0.5	15	280	60	12000	1500	3000	650	5000
2Tx9M	2	9	15	90	0.5	/	500	70	9000	1700	3400	650	5000
5T×5M/2T×9M	5/2	9	15	70	0.5	15	420	60	11000	1500	2900	650	4900

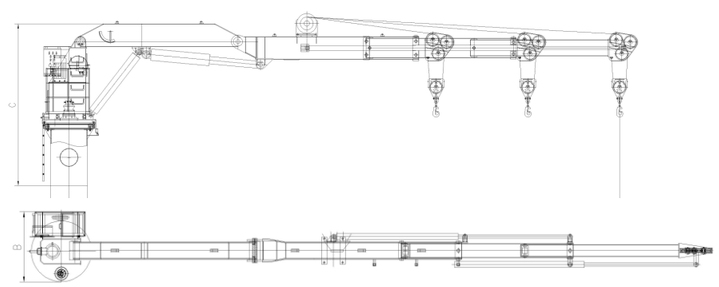

液压折叠伸缩臂吊机外形尺寸图
Dimension for Knuckle & Telescopic Boom Crane

ELECTRIC CRANES/Range from 80 up to 1200KNM | 电动吊机/范围从80至1200KNM

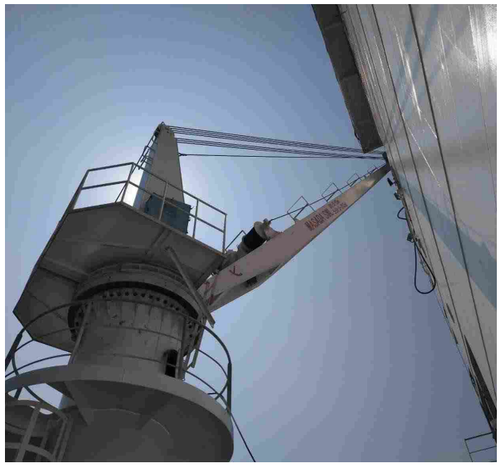

5.5T×21.5M&8T×15M钢丝绳变幅起重机
5.5T21.5M & 8T15M Electric Driven Wire Luffing Crane

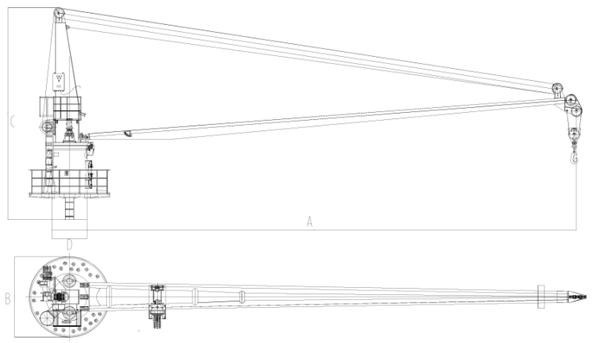

电动吊机外形尺寸图
Dimension for Electric Crane

电动钢丝绳变幅起重机主要产品规格和技术参数
Main specification and parameter for Electric Driven Wire Luffing Crane

规格Type	额定起重载荷 SWL(t)	最大幅度 (m)	起升速度 (m/min)	变幅时间 (s)	回转速度 (r/min)	电机功率 (KW)	倾覆力矩 (KN.m)	垂直力 (KN)	主要尺寸				吊机重量 (kg)
									长A(mm)	宽B(mm)	高C(mm)	筒体直径D(mm)	
2T×4M	2	4	10	60	0.5	6.3/6.3/2.5	201	83	4500	2100	4200	810	3419
3T×8M	3	8	10	/	0.5	8.5/8.5/4	350	32	9700	2300	5800	1000	5700
5T×11.8M	5	11.8	10	90	0.8	18.5/18.8/7.5	480	61	13900	2300	6500	1250	8100
4T×21.5M&8T×15M	4	21.5	11	120	0.6	22/22/13	1700	210	25000	3600	12500	1500	12600
5.5T×21.5M&8T×15M	5.5	21.5	11	120	0.6	22/22/13	1700	210	25000	3600	12500	1500	12600
8TX16M	8	16	10	120	0.5	22/22/7.5	1700	210	18000	3500	7800	1500	11000

MONORAIL CRANES/Range from 4T up to 12.5T | 平移吊机/范围从4T至12.5T

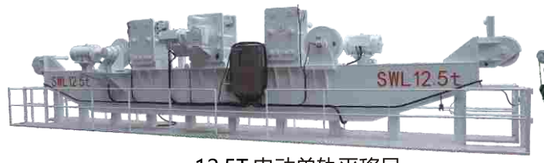

12.5T 电动单轨平移吊
12.5T Electric Monorail Crane

4T 电动单轨平移吊
4T Electric Monorail Crane

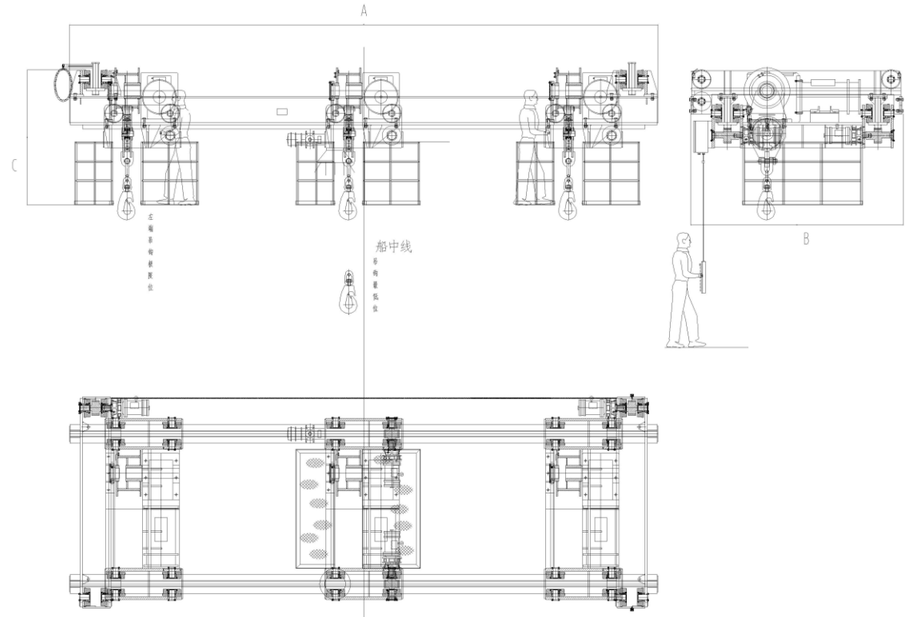

电动单轨平移吊外形尺寸图
Dimension for Electric Monorail Crane

电动单轨平移吊主要产品规格和技术参数
Main specification and parameter for Electric Monorail Crane

规格Type	额定起重载荷 SWL(t)	升出距离 (m)	起升速度 (m/min)	行走速度 (r/min)	电机功率 (KW)	倾覆力矩 (KN.m)	垂直力 (KN)	主要尺寸				吊机重量 (kg)
								长A(mm)	宽B(mm)	高C(mm)	筒体直径D(mm)	
4T	4	4	10	/	13/13/4	/	/	28400	1700	2000	/	5700
5T	5	4	10	/	15/15/4	/	/	28400	1800	2000	/	7296
8T	8	22	10	11	22/22/8.5	/	/	46000	2200	2865	/	22000
10T	12.5	4	10	10	30/30/15	/	/	48000	2000	3500	/	32967
13T	10	22	10	10	22/22/8.5	/	/	28400	1800	2000	/	8500
12.5T	13	4	10	10	30/30/15	/	/	48000	2000	3500	/	28000

ENGINE ROOM CRANES/Range from 0.1T up to 12.5T | 机舱行车/范围从0.1T至12.5T

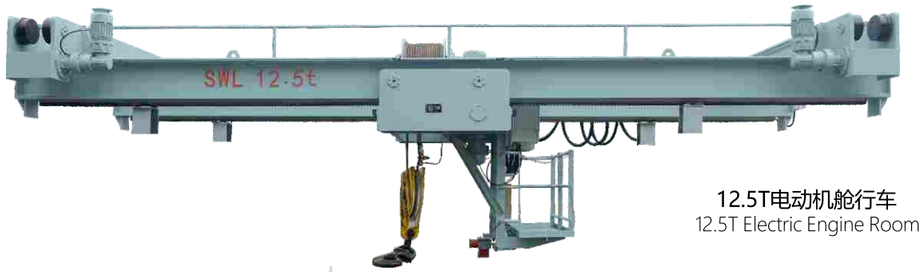

12.5T电动机舱行车
12.5T Electric Engine Room

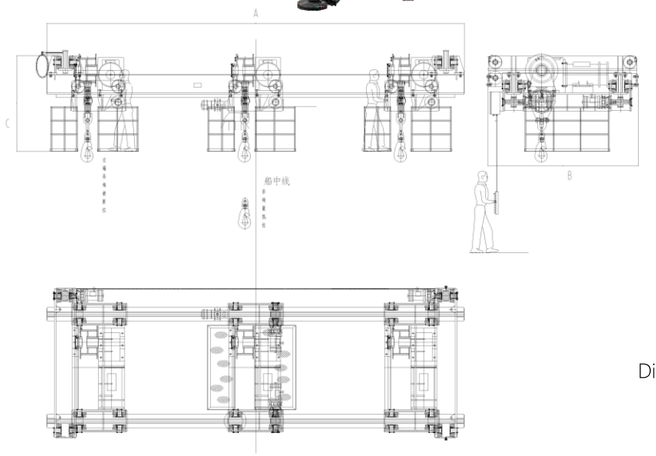

电动机舱行车外形尺寸图
Dimension for Electric Engine Room

手动单梁机舱行车主要产品规格和技术参数
Main specification and parameter for Manual Control Single Beam Engine Room Crane

规格Type	额定起重载荷 SWL(t)	最大跨度 (m)	起升速度 (m/min)	主要尺寸			吊机重量 (kg)
				长A(mm)	宽B(mm)	高C(mm)	
0.5T	0.5	/	4	7200	350	500	300
0.5T	0.5	/	8	7200	350	500	300
0.9T	0.9	/	8	7200	350	500	300
0.99T	0.99	/	8	7200	350	500	300
1T	1	/	8	7200	350	500	300

电动单/双梁机舱行车主要产品规格和技术参数
Main specification and parameter for Electric Control Single/Double Beam Engine Room Crane

规格Type	额定起重载荷 SWL(t)	最大跨度 (m)	起升速度 (m/min)	主要尺寸			吊机重量 (kg)
				长A(mm)	宽B(mm)	高C(mm)	
2T×8M	2	8	9.6/0.96	8500	2100	1500	2150
3T×3.5M	3	3.5	9.6/0.96	4100	2100	1500	2150
4T×6.8M	4	6.8	9.6/0.96	7100	2300	1600	3100
6.5T×8.05M	6.5	8.9	9.6/0.96	9500	2300	1600	3500
5T	5	6.5	3/1	7300	2000	1500	3100
8T	8	8.5	9.6/0.96	9000	2800	2000	6500
12.5T×8.5M	12.5	9.2	9.6/0.96	9200	3100	2500	8900

DAVITS/Range from 0.1T up to 2T | 吊柱/范围从0.1T至2T

AIR DAVITS
气动吊柱

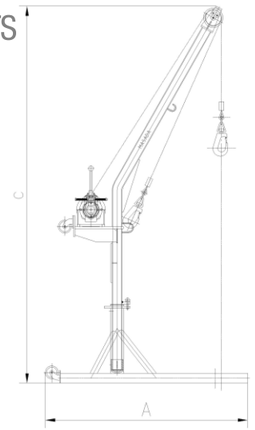

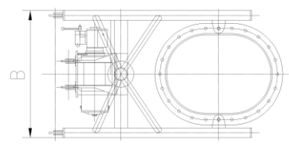

气动起重机外形尺寸图
Dimension for Air Davits

500KG气动垃圾吊
500kg Air Davits

气动起重机主要产品规格和技术参数
Main specification and parameter for Air Davits

规格Type	额定起重载荷 SWL(t)	最大幅度 (m)	起升速度 (m/min)	倾覆力矩 (KN.m)	垂直力 (KN)	主要尺寸				吊机重量 (kg)
						长A(mm)	宽B(mm)	高C(mm)	筒体直径D(mm)	
0.2T×0.8M	0.2	0.8	10	/	/	1500	1000	2900	/	140
0.25T×1.8M	0.25	1.8	10	/	/	1800	350	3900	/	170
0.5T×1.8M	0.5	1.8	10	/	/	1800	450	3900	/	210
2T×3M	2.5	3	5	75	41	3300	700	4100	450	3300

MANUAL DAVITS
手动吊柱

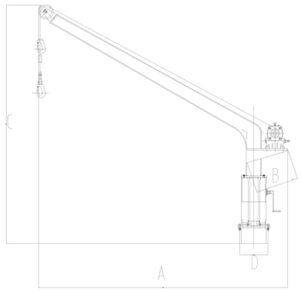

手动起重机外形尺寸图
Dimension for Manual Davits

0.5T手动起重机
0.5TManual Davits

手动起重机主要产品规格和技术参数
Main specification and parameter for Manual Davits

规格Type	额定起重载荷 SWL(t)	最大幅度 (m)	倾覆力矩 (KN.m)	垂直力 (KN)	主要尺寸				吊机重量 (kg)
					长A(mm)	宽B(mm)	高C(mm)	筒体直径D(mm)	
0.5T×2.8M	0.5	2.8	40	16	3100	450	3000	325	260
0.9T×3M	0.9	3	43	17	3300	450	3000	325	280
0.9T×3.6M	0.9	4.5	45	17	3800	450	3000	325	360
0.9T×4.5M	0.9	2.8	75	45	4800	450	3000	325	360

WINDLASS & WINCH 锚绞机

HYDRAULIC WINDLASS | 液压锚机

24000TEU船用Φ147液压锚机
Φ147 Hydraulic Windlass for 24000T TEU Vessel

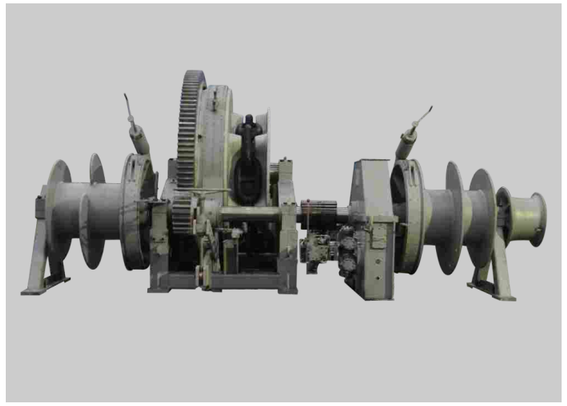

400K VLOC船用Φ122液压锚机
Φ122 Hydraulic Windlass for 400K VLOC

76000T散货船用的Φ76液压锚机
Φ76 Hydraulic Windlass for 76000T Bulk Carrier

ELECTRIC WINDLASS | 电动锚机

38800DWT散货船用Φ68电动锚机
Φ68 Electric Windlass for 38800DWT Bulk Carrier

40000T油轮用Φ73液压锚机
Φ73 Hydraulic windlass for 40000T oil tanker

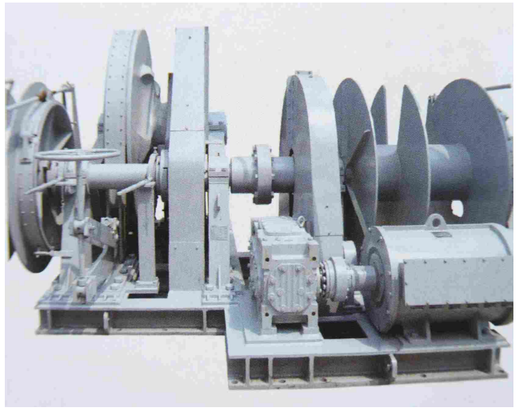

30000T自航半潜船用Φ95电动绞锚机
Φ95 Electric Windlass for 30000T Self-propelling Dredger

江苏政田—三菱 锚绞机

JIANGSU MASADA-MITSUBISHI WINDLASS & WINCH

■ 液压锚机主要产品规格和技术参数

Main specification and parameter for hydraulic windlass

液压锚机规格 Specification of Hydraulic Windlass	锚链直径 Chain Dia (mm)	工作负载 Working Load (kN)	起锚速度 Weigh Anchor Speed (m/min)	绞车拉力 Towing Force (kN)	绞车速度 Towing Speed (m/min)	电机功率 Motor Power (kW)
* Φ19/20.5/22	19/20.5/22	15.3/17.9/20.6	≥9	15	≥12	7.5
* Φ24/26	24/26	24.5/28.7	≥9	20	≥12	11
* Φ28/30	28/30	33.3/38.3	≥9	25	≥12	15
* Φ32/34/36	32/34/36	43.5/49.1/55.1	≥9	30	≥12	22
* Φ38/40/42	38/40/42	61.4/68.0/75.0	≥9	50	≥12	30
* Φ44/46/48	44/46/48	82.3/89.9/97.9	≥9	60	≥12	37
* Φ50/52/54	50/52/54	106.3/114.9/123.9	≥9	60	≥15	37
Φ56/58/60	56/58/60	133.3/143.0/153	≥9	80	≥15	40
Φ62/64	62/64	163.4/174.1	≥9	100	≥15	47
Φ66/68	66/68	185.1/196.5	≥9	120	≥15	55
Φ70/73	70/73	208.3/226.5	≥9	147	≥15	60
Φ76/78	76/78	245.5/258.6	≥9	147	≥15	70
Φ81/84	81/84	311.7/335.2	≥9	167	≥15	90
Φ87/90	87/90	359.5/384.8	≥9	200	≥15	102
Φ92/95	92/95	402.2/428.7	≥9	200	≥15	115
Φ97/102	97/102	446.9/494.2	≥9	250	≥15	130
Φ105/107	105/107	523.7/543.8	≥9	250	≥15	145
Φ111/114	111/114	585.2/617.3	≥9	250	≥15	160
Φ117/122	117/122	650.2/707.0	≥9	250	≥15	187
Φ132	132	827.64	≥9	300	≥15	250
Φ147	147	1027	≥9	355	≥15	480

注：1）在标*的可选为政田品牌。2）以上规格参数可选舷边遥控，恒张力等功能。

Notes:1) Masada brand only with * mark.
2) Remote control and auto tensioning are available for above all spec. data.

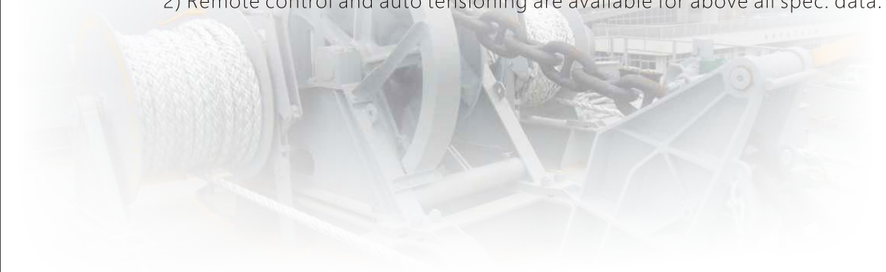

■ 电动锚机主要产品规格和技术参数

Main specification and parameter for electric windlass

电动锚机规格 Specification of Electric Windlass	锚链直径 Chain Dia (mm)	工作负载 Working Load (kN)	支持负载 Supporting Load(k/N)	起锚速度 Weigh Anchor Speed (m/min)	系载负载 Mooring Load (kN)	电机功率 Motor Power (kW)
* Φ19/20.5/22	19/20.5/22	17.2/20/23	135/157/180	≥9	15	8.5/3.5
* Φ24/26	24/26	27.4/32.1	214/250	≥9	20	8.5/3.5
* Φ28/30	28/30	37.2/42.8	289/330	≥9	25	11/11/7.5
* Φ32/34/36	32/34/36	48.6/54.9/61.6	374/421/470	≥9	30	16/16/1.1
* Φ38/40/42	38/40/42	68.9/76.0/83.8	522/576/632	≥9	50	22/22/16
* Φ44/46/48	44/46/48	92.0/100.5/109.4	691/753/816	≥9	60	20/20/22
* Φ50/52/54	50/52/54	118.8/128.4/138.5	882/950/1021	≥9	60	30/30/22
Φ56/58/60	56/58/60	149.0/159.8/171.0	1093/1168/1245	≥9	80	45/45/30
Φ62/64	62/64	182.6/194.6	1324/1405	≥9	100	45/45//30
Φ66/68	66/68	206.9/219.6	1488/1573	≥9	120	45/45/30
Φ70/73	70/73	232.8/253.1	1660/1794	≥9	147	60/60/45
Φ76/78	76/78	274.4/289.0	1932/2026	≥9	147	60/60/45
Φ81/84	81/84	311.7/335.2	2171/2320	≥9	160	75/75/36
Φ87/90	87/90	359.5/384.8	2473/2629	≥9	200	28/84/84
Φ92/95	92/95	402/428.7	2735/2898	≥9	200	85/85/64
Φ97/102	97/102	446.9/494.2	3010.5/3874.5	≥9	250	85/85/64
Φ105/107	105/107	523.7/543.8	3465/3582	≥9	250	115/115/38.3
Φ111/114	111/114	585.2/617.3	3816/4000.5	≥9	250	120/120/90
Φ117/122	117/122	650.2/707.0	4185/4495.5	≥9	250	137/137/100

注：1）在标*的可选为政田品牌。2）以上规格参数可选舷边遥控，恒张力等功能。

Notes: 1) Masada brand only with * mark.
2) Pole varible type, VFD type, remote control and auto tensioning are available for above all spec. data.

HYDRAULIC MOORING WINCH | 液压系泊绞车

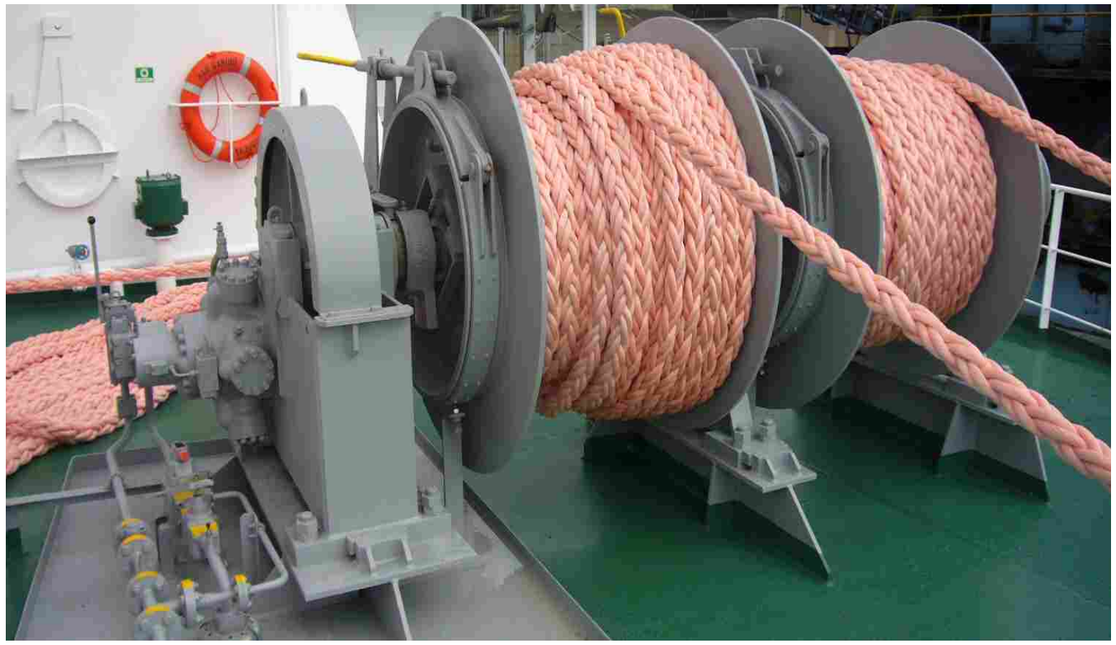

51000DWT散货船122.5KN液压系泊绞车
122.5KN Hydraulic Mooring Winch for 51000DWT Bulk Carrier

76000T 散货船147KN 液压系绞泊车
147KN Hydraulic Mooring Winch for 76000T Bulk Carrier

50000T 成品油船118KN 液压系绞泊车
118KN Hydraulic Mooring Winch for 50000T Products Tanker

ELECTRIC MOORING WINCH | 电动系泊绞车

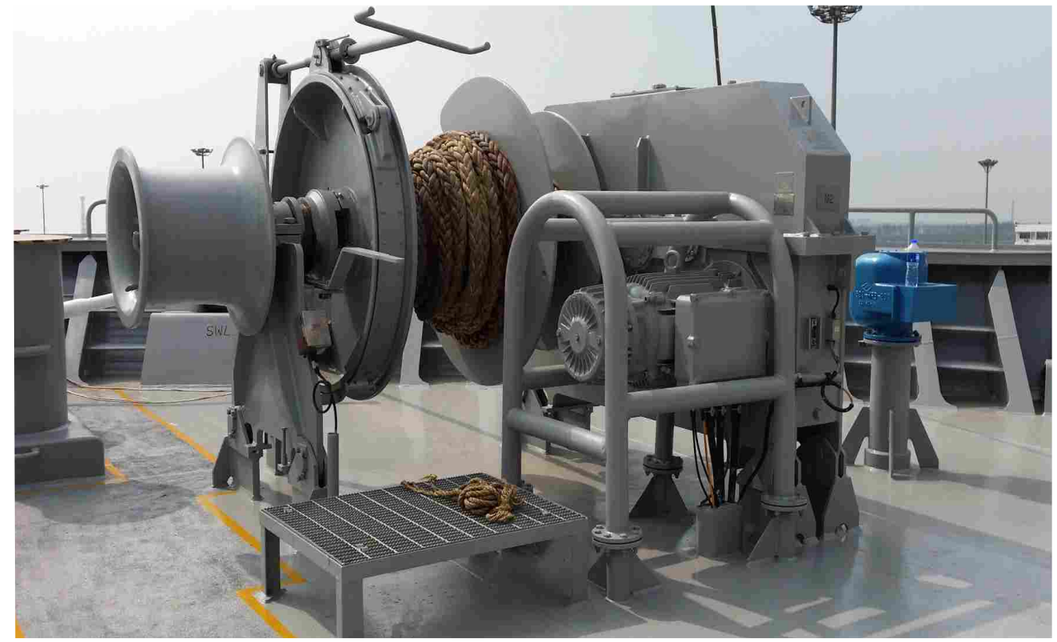

4800TEU集装箱船206KN电动绞车
206KN Electric Mooring Winch for 4800TEU Container

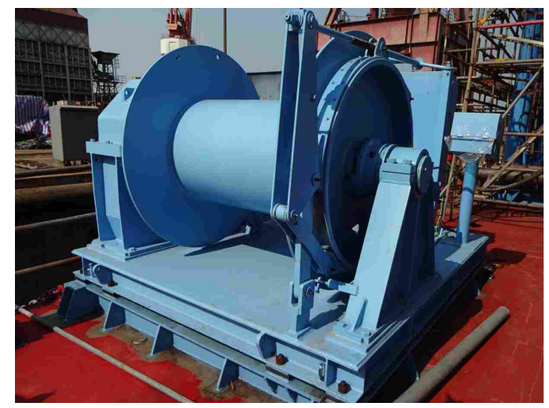

打桩船用100KN电动变频绞车
100KN Electric Frequency Conversion Winch for Pile Driving Barge

38800DWT散货船用125KN电动绞车
125KN Electric Winch for 38800DWT Bulk Carrier

■ 液压系泊绞车主要产品规格和技术参数

Main specification and parameter for hydraulic mooring winch

液压绞车规格 Specification of Hydraulic Winch	额定拉力 Rated Pull (kN)	额定速度 Rated Speed (m/min)	卷筒容绳量 Drum Capacity (m)	电机功率 Motor Power (Kw)
10KN	10	≥12	Φ11×150	5.5
20KN	20	≥12	Φ15×150	11
40KN	40	≥15	Φ17.5×150	22
50KN	50	≥15	Φ20.5×150	30
75KN	75	≥15	Φ26×150	45
100KN	100	≥12	Φ30×200	45
160KN	160	≥12	Φ32×250	75
200KN	200	≥9.6	Φ41×250	75
250KN	250	≥9.6	Φ44.5×250	90
315KN	315	≥7.8	Φ52×250	90
400KN	400	≥7.8	Φ56×250	110
450KN	450	≥6	Φ56×250	110
500KN	500	≥6	Φ58×250	110
560KN	560	≥6	Φ64×250	132
600KN	600	≥6	Φ64×250	132
650KN	650	≥5	Φ70×250	132
1000KN	1000	≥4	Φ85×250	132
1200KN	1200	≥4	Φ95×250	160
1500KN	1500	≥4	Φ95×250	200
1800KN	1800	≥4	Φ95×250	250
2000KN	2000	≥4	Φ100×250	270

注：可选舷边遥控，恒张力等功能

Notes: Remote control and auto tensioning are available

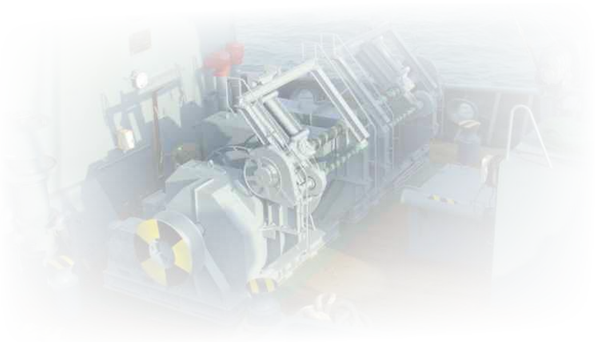

■ 电动系泊绞车主要产品规格和技术参数

Main specification and parameter for electric mooring winch

电动绞车规格 Electric Mooring Winch	额定拉力 Rated Pull (kN)	额定速度 Rated Speed (m/min)	卷筒容绳量 Drum Capacity (m)	电机功率 Motor Power (Kw)
5KN	5	≥12	Φ8×100	3/1.2
5KN	10	≥12	Φ10×150	4.3/1.7
20KN	20	≥12	Φ15×150	8.5/3.5
30KN	30	≥15	Φ17×150	11/11/7.5
40KN	40	≥15	Φ18×150	16/16/11
50KN	50	≥15	Φ20.5×180	30/30/22
75KN	75	≥15	Φ26×200	30/30/22
80KN	80	≥15	Φ26×200	45/45/30
100KN	100	≥15	Φ30×200	45/45/30
125KN	125	≥15	Φ30×200	60/60/45
160KN	160	≥15	Φ32×250	45/45/30
200KN	200	≥9.6	Φ41×250	60/60/45
250KN	250	≥9.6	Φ44.5×250	60/60/45
315KN	315	≥7.8	Φ52×250	60/60/45
400KN	400	≥7.8	Φ56×250	85/85/64
500KN	500	≥7.8	Φ58×250	85/85/64
560KN	560	≥6	Φ64×250	85/85/65
600KN	600	≥6	Φ64×250	85/85/65
650KN	650	≥6	Φ70×250	85/85/66
1000KN	1000	≥4	Φ85×250	85/85/66
1200KN	1200	≥4	Φ95×250	120/120/90
1500KN	1500	≥4	Φ95×250	150/150/72
1800KN	1800	≥4	Φ95×250	150/150/72
2000KN	2000	≥4	Φ100×250	180/180/135

注：可选变极控制，变频控制，舷边遥控，恒张力等功能

Note: Pole-changing, VFD, remote control and auto tensioning are available.

液压锚机、液压系泊绞车专用液压动力系统

HYDRAULIC POWER SYSTEM FOR HYDRAULIC WINDLASS & HYDRAULIC MOORING WINCH

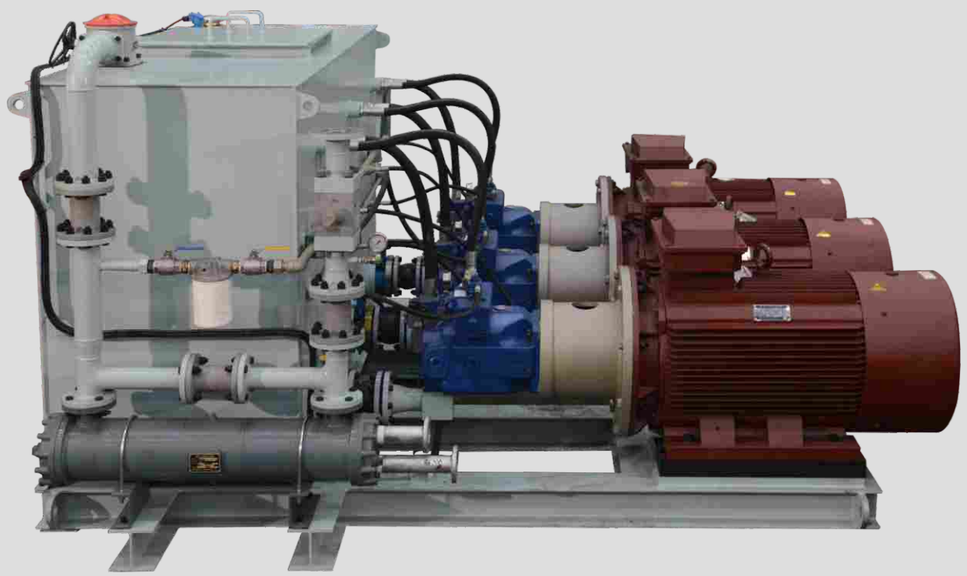

400K VLOC船用
For 400K VLOC Vessel

液压锚机、液压系泊绞车标准进口配置

STANDARD IMPORT CONFIGURATIONOF HYDRAULIC WINDLASS & HYDRAULIC MOORING WINCH

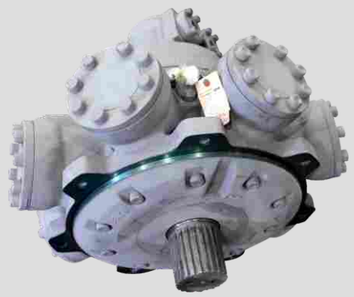

日本KYB液压马达
JAPAN KYB HYDRAULIC motor

日本内田液压换向阀
Japan Hydrogear Hydraulic Control Valve

日本三菱液压马达
Japan MHI Hydraulic Motor

德国博世力士乐液压泵
Germany Bosch Rexroth Hydraulic Pump

HYDRAULIC TOWING WINCH | 液压拖缆机

液压起锚拖缆机
Hydraulic Anchoring And Towing Winch

液压拖缆机
Hydraulic Towing Winch

气动尾钩
Pneumatic Tailhook

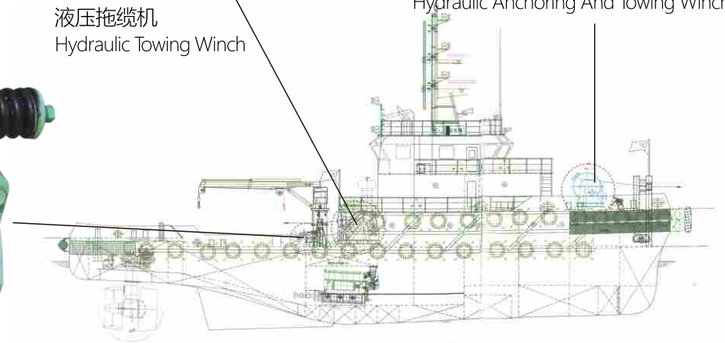

HYDRAULIC ANCHORING AND TOWING WINCH | 液压起锚拖缆机

■ 液压拖缆机主要产品规格和技术参数

Main specification and parameter for hydraulic towing winch

型号 Type	规格 Specification (T×m/min)	液压泵用电机 Motor for Hydraulic Pump (KW)	静止刹车力 Static Brake Force (Ton)	绳径 Rope Dia (Φmm)
MOW-T30	1.5×13	18.5	30	Nr80
MOW-T40	2.0×13	22	40	NR85
MOW-T50	2.5×13	30	50	NR90
MOW-T60	2.5×13	30	60	NR100
MOW-T70	3.0×13	30	70	NR100
MOW-T80	3.5×13	37	80	NR110
MOW-T90	4.0×13	37	90	NR110
MOW-T100	4.0×13	37	100	NR110
MOW-T120	5.0×13	37	120	NR110
MOW-T150	6.0×13	45	150	SUR50
MOW-T180	6.0×13	45	150	SUR52
MOW-T200	6.0×13	45	200	SUR56

■ 液压起锚拖缆机主要产品规格和技术参数

Main specification and parameter for hydraulic anchoring and towing winch

型号 Type	规格 Specification (T×m/min)	液压泵用电机 Motor for Hydraulic Pump (KW)	链径 Chain Dia (Φmm)	滚筒刹车力 Drum Brake Force (T)	绳径 Rope Dia (Φmm)
MOW-T30	1.5×13	18.5	19-22	30	NR80
MOW-T40	2.0×13	22	22-24	40	NR85
MOW-T50	2.5×13	30	24-26	50	NR90
MOW-T60	2.5×13	30	24-26	60	NR100
MOW-T70	3.0×13	30	24-26	70	NR100
MOW-T80	3.0×13	37	26-28	80	NR110
MOW-T90	3.5×13	37	26-28	90	NR110
MOW-T100	3.5×13	37	26-28	100	NR110
MOW-T120	3.5×13	37	26-28	120	NR110
MOW-T150	6.0×13	45	30-36	150	SUR50

STEERING GEAR 舵 机

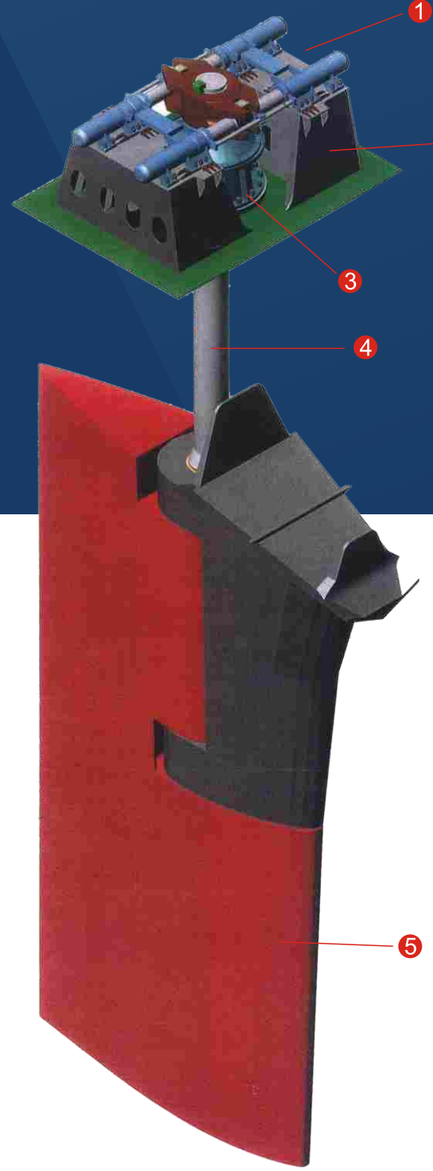

1.舵机
2.舵机底座
3.平面摩擦水密上舵承
4.舵杆
5.舵叶
1.Steering Gear
2.Steering Gear foundation
3.Rudder carrier bearer
4.Rudder Stork
5.Rudder

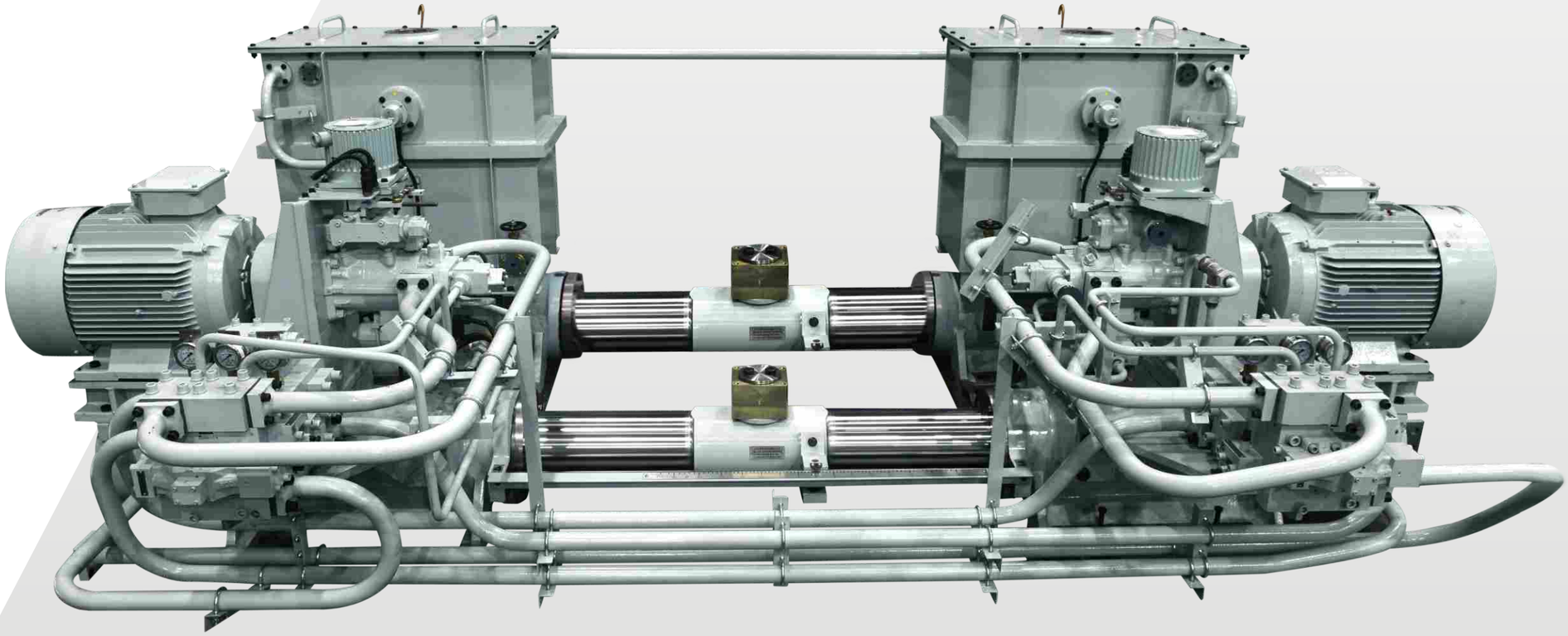

江苏政田—三菱 舵机

JIANGSU MASADA-MITSUBISHI STEERING GEAR

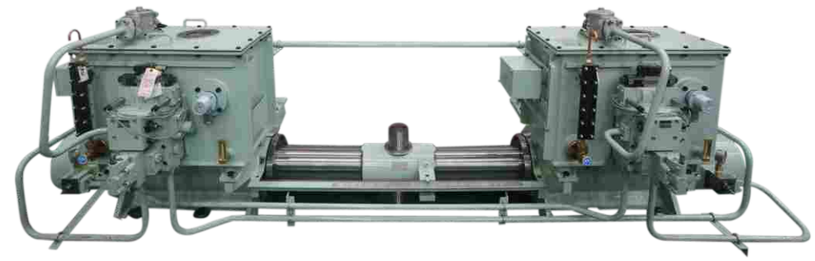

HYDRAULIC STEERING GEAR | 液压舵机

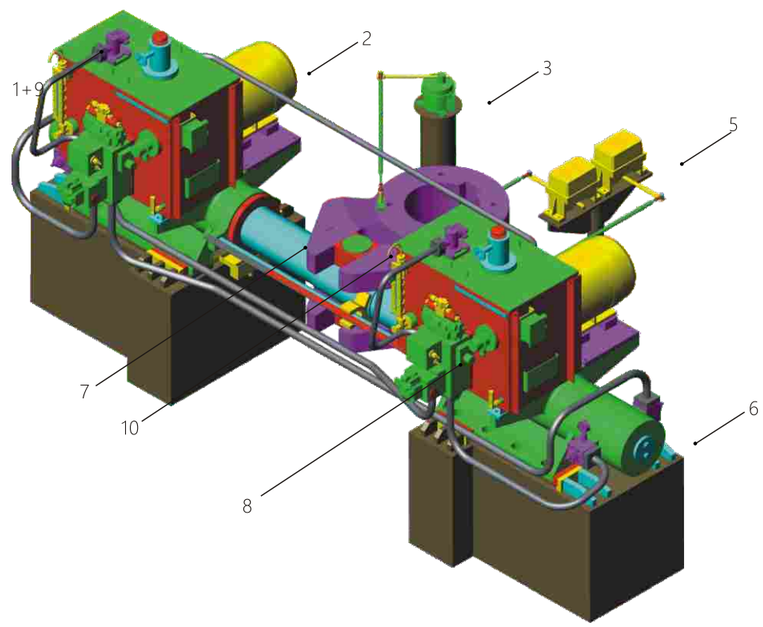

- 较高的信赖性和耐久性
- 优秀的应答性
- 简易的设计和紧凑的结构
- 容易在机侧操舵
- 完善在双重化控制系统
- 容易维修

- High Reliability & Durability
- Excellent Response
- Simple Design & Compact Configuration
- Easy Control of Emergency Steering
- Complete Dual Control System
- Easy Maintenance

No.	名称	Name
1	油箱（泵位于内侧）	Oil tank
2	电动机	Motor
3	舵角发讯器	Rudder angle transmitter
4	舵柄	Tiller
5	舵角反馈单元	Feed back units
6	液压缸	Hydraulic cylinder
7	柱塞	Ram
8	阀组（日本原装进口）	Valve Block
9	泵	Pump
10	柱塞销衬套	Ram Pin Bush

SFC TYPE STEERING GEAR | SFC型舵机

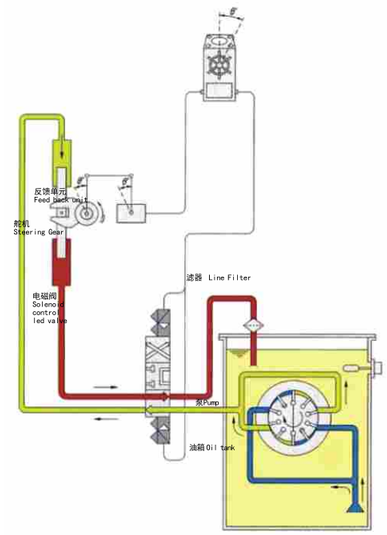

SFC运行图
Operation diagram of SFC Type

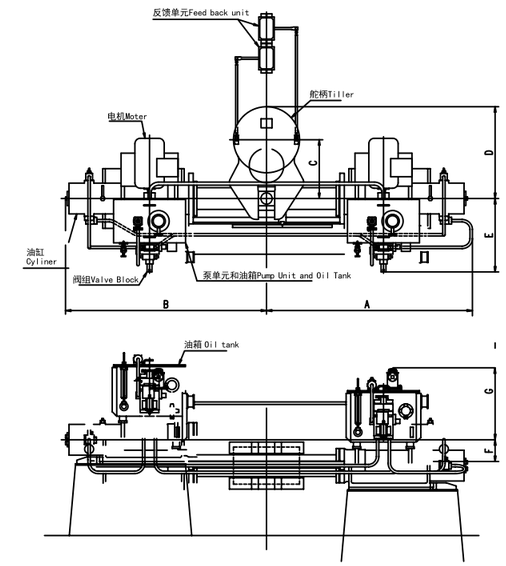

SFC外形尺寸
Dimension for SFC Type

■ SFC型舵机主要产品规格和技术参数

Main specification and parameter for SFC type steering gear

类型 Type				SFC-20	SFC-30	SFC-40	SFC-50	SFC-60	SFC-80	
在最大工作压力时扭矩Torque at maximum working pressure			KN-m	226	314	441	520	618	706	844
转舵速度 Rudder turning speed			deg./sec	65/28	65/28	65/28	65/28	65/28	65/28	
舵柄公称半径 Nominal tiller radius			mm	430	470	520	560	580	650	
柱塞泵直径 Diameter of ram			mm	155	170	195	205	220	240	
最大工作压力Maximum working oil			Mpa	20.6	21.6	21.6	21.1	21.1	18.1	21.6
安全阀压力Safety valve pressure			Mpa	25.8	27.0	27.0	26.4	26.4	22.7	27.0
泵和电机 Motor and pumps	电动机 Motor	输出×数量 Output×number	KW	7.5×2	11×2	17.3×2	17.3×2	21.3×2	25.3×2	25.3×2
		转速 Number of revolution	min-1	1800	1800	1800	1800	1800	1800	
		超负荷 Overload	%/sec	200/60	200/60	200/60	200/60	200/60	200/60	
	泵型号×数量 Pump Type×Number			T6C-005×2	T6C-006×2	T6C-010×2	T6C-010×2	T6C-014×2	T6C-017×2	
尺寸 Dimensions		A		1645	1716	1860	1945	2080	2260	
		B		1520	1685	1845	1945	2020	2225	
		C		430	470	520	560	580	650	
		D	mm	675	740	815	880	910	1015	
		E		785	815	815	815	1000	1000	
		F		175	190	205	215	220	240	
		G		1020	1030	1040	1050	1200	1220	

江苏政田—三菱 舵机

JIANGSU MASADA-MITSUBISHI STEERING GEAR

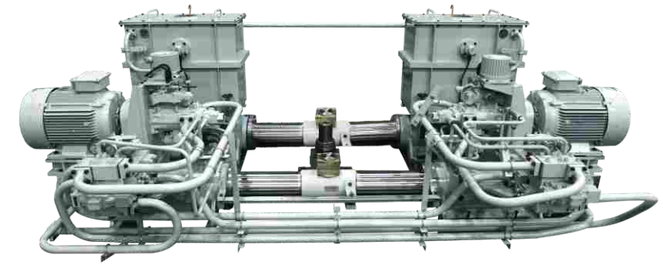

SFT TYPE STEERING GEAR | SFT型舵机

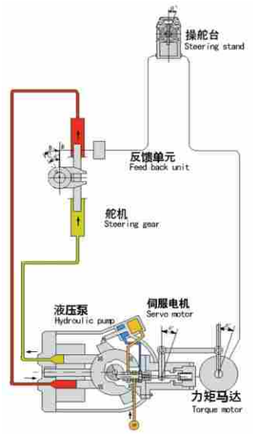

SFT运行图
Operation diagram of SFT type

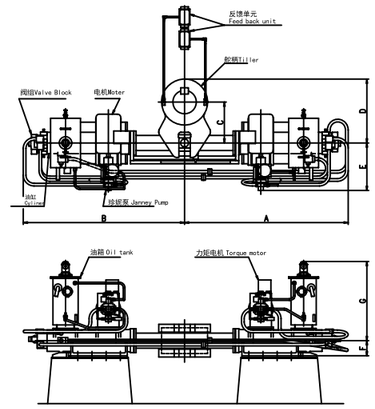

SFT外形尺寸
Dimension for SFT type

■ 舵机主要产品规格和技术参数

Main specification and parameter for SFT type steering gear

类型 Type				SFT-80		SFT-125		SFT-170	
在最大工作压力时扭矩Torque at maximum working pressure			KN-m	706	844	1030	1196	1402	1726
转舵速度 Rudder turning speed			deg./sec	65/28		65/28		65/28	
舵柄公称半径 Nominal tiller radius			mm	650		730		850	
柱塞泵直径 Diameter of ram			mm	240		270		300	
最大工作压力maximum working oil			Mpa	18.1	21.6	18.6	21.6	17.6	21.6
安全阀压力Safety valve pressure			Mpa	22.7	27.0	23.3	27.0	22.1	27.0
主要和辅助泵 With main and auxlliary pumps	电动机 Motor	输出×数量 Output×number	KW	1800		1800		1800	
		转速 Number of revolution	min-1	200/60		200/60		200/60	
		超负荷 Overload	%/sec	06V-FH2MK×2		1V-FH2MK×2		1V-FH2MK×2	
	泵型号×数量 Pump Type×Number			25		34.5	42.6	51.8	51.8
尺寸 Dimensions	A			2600		2900		3225	
	B			2565		2865		3200	
	C		mm	650		730		850	
	D			1015		1140		1315	
	E			760		910		910	
	F			240		260		285	
	G			1260		1395		1415	

DFT TYPE STEERING GEAR | DFT型舵机

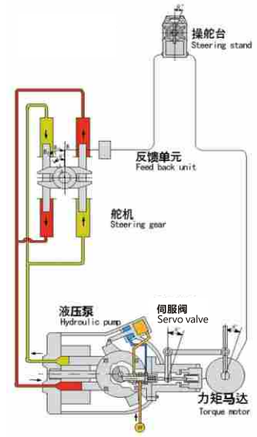

DFT运行图
Operation diagram of DFT Type

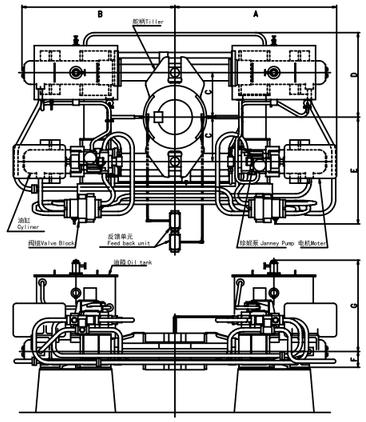

DFT外形尺寸
Dimension for DFT type

■ 舵机主要产品规格和技术参数

Main specification and parameter for DFT type steering gear

DFT-60		DFT-80		DFT-125		DFT-170		DFT-200	DFT-250	DFT-300	DFT-335	DFT-400
510	608	726	892	1030	1236	1373	1687	2030	2393	2854	3442	3923
65/28		65/28		65/28		65/28		65/28	65/28	65/28	65/28	65/28
470		520		580		650		715	730	780	850	900
170		195		220		240		250	270	285	300	315
18.1	21.6	17.6	21.6	17.6	21.1	17.6	21.6	21.6	21.6	21.6	21.6	21.1
22.7	27.0	22.1	27.0	22.1	26.4	22.1	27.0	27.0	27.0	27.0	27.0	26.4
17.3×2	21.3×2	25.3×2	25.3×2	34.5×2	42.6×2	51.8×2	51.8×2	63×2	86×2	86×2	96×2	127×2
1800		1800		1800		1800		1200	1200	1200	1200	1200
200/60		200/60		200/60		200/60		200/60	200/60	200/60	200/60	200/60
06V-FH2B-MK×2		06V-FH2B-MK×2		1V-FH2B-MK×2		1V-FH2B-MK×2		3V-FH2B-MK×2	3V-FH2B-MK×2	3V-FH2B-MK×2	3V-FH2B-MK×2	6V-FH2B-MK×2
1840		2000		2190		2380		2580	2650	2920	2990	3265
1682		1845		2020		2225		2390	2505	2655	2845	2970
470		520		580		650		715	730	780	850	900
895		970		1080		1150		1375	1385	1440	1510	1645
1400		1625		1715		1800		1870	1885	1935	2005	1645
190		205		220		240		255	260	275	285	260
217		1370		1370		1370		1480	1500	1510	1540	1585

DFT TYPE STEERING GEAR | DFT型舵机

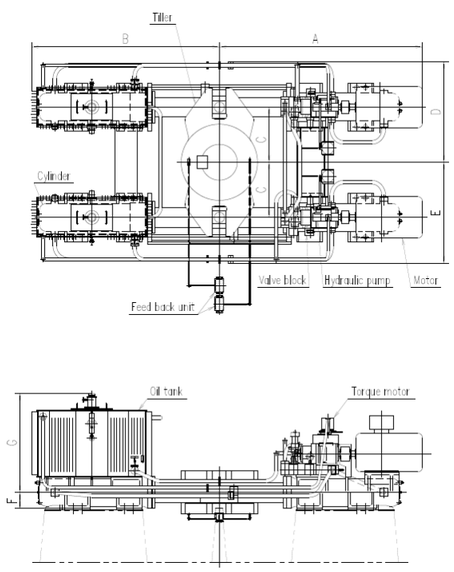

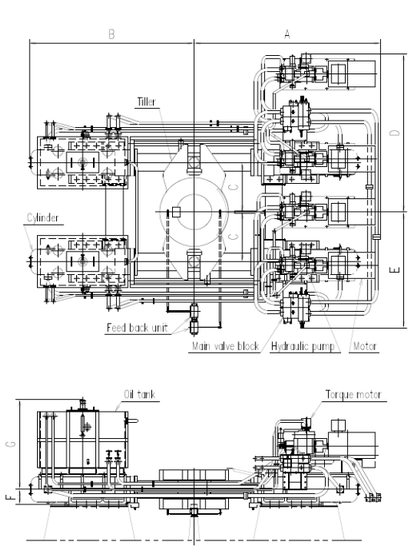

■ DFT舵机主要产品规格和技术参数

Main specification and parameter for DFT TYPE STEERING GEAR

类型 Type				DFT-475	DFT-530	DFT-600	DFT-670	DFT-760	DFT-870	DFT-1000	DFT-1150
在最大工作压力时扭矩Torque at maximum working pressure			KN-m	4756	5394	6031	6721	7532	8552	9807	11307
转舵速度 Rudder turning speed			deg./sec	65/28	65/28	65/28	65/28	65/28	65/28	65/28	65/28
舵柄公称半径 Nominal tiller radius			mm	940	970	1000	1060	1100	1130	1180	1240
柱塞泵直径 Diameter of ram			mm	335	355	370	375	390	410	430	450
最大工作压力Maximum working oil			Mpa	21.6	21.1	21.1	21.6	21.6	21.6	21.6	21.6
安全阀压力Safety valve pressure			Mpa	27.0	26.4	26.4	27.0	27.0	27.0	27.0	27.0
主要和辅助泵 With main and auxliary pumps	电动机 Motor	输出×数量 Output×number	KW	152×2	184×2	96×4	104×4	127×4	127×4	152×4	184×4
		转速 Number of revolution	min-1	1200	1200	1200	1200	1200	1200	1200	1200
		超负荷 Overload	%/sec	200/60	200/60	200/60	200/60	200/60	200/60	200/60	200/60
	泵型号×数量 Pump Type×Number			6V-FH2MK×2		3V-FH2MK×4		6V-FH2MK×4			
尺寸 Dimensions		A		3460	3500	3665	3825	4120	4240	4400	4600
		B		3195	3235	3325	3485	3645	3740	3930	4140
		C		940	970	1000	1060	1100	1130	1180	1240
		D	mm	1720	1750	2240	2300	3525	3475	3525	3585
		E		1720	1750	3215	3275	2570	2520	2570	2630
		F		275	285	325	330	335	345	365	365
		G		1690	1700	1705	1705	2005	2015	2040	2045

DFT TYPE STEERING GEAR | DFT型舵机

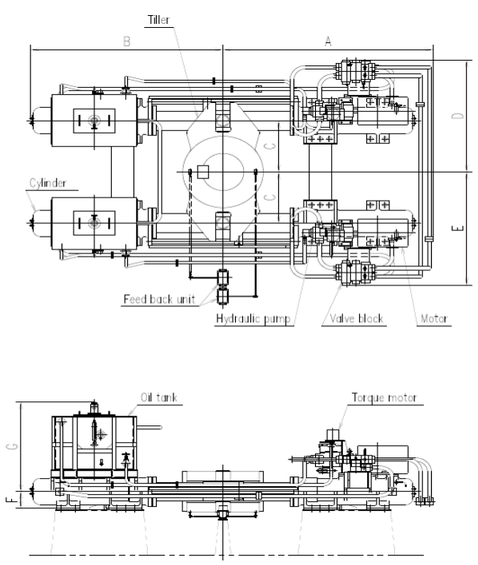

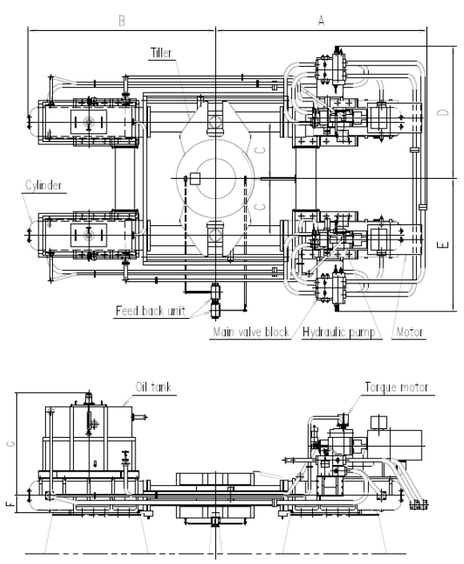

■ DFT舵机主要产品规格和技术参数

Main specification and parameter for DFT TYPE STEERING GEAR

类型 Type				DFT-475	DFT-530	DFT-600	DFT-670	DFT-760	DFT-870	DFT-1000	DFT-1150
在最大工作压力时扭矩Torque at maximum working pressure			KN-m	4756	5394	6031	6721	7532	8552	9807	11307
转舵速度 Rudder turning speed			deg./sec	65/28	65/28	65/28	65/28	65/28	65/28	65/28	65/28
舵柄公称半径 Nominal tiller radius			mm	940	970	1000	1060	1100	1130	1180	1240
柱塞泵直径 Diameter of ram			mm	335	355	370	375	390	410	430	450
最大工作压力Maximum working oil			Mpa	21.6	21.1	21.1	21.6	21.6	21.6	21.6	21.6
安全阀压力Safety valve pressure			Mpa	27.0	26.4	26.4	27.0	27.0	27.0	27.0	27.0
无辅助泵 Without auxiliary pumps	电动机 Motor	输出×数量 Output×number	KW	75×2	75×2	90×2	100×2	110×2	125×2	150×2	160×2
		转速 Number of revolution	min-1	1200	1200	1200	1200	1200	1200	1200	1200
		超负荷 Overload	%/sec	200/60	200/60	200/60	200/60	200/60	200/60	200/60	200/60
	泵型号×数量 Pump Type×Number			3V-FH2MK×2				6V-FH2MK×2			
尺寸 Dimensions		A		3445	3530	3665	3825	4120	4240	4400	4600
		B		3125	3225	3325	3485	3645	3740	3930	4140
		C		940	970	1000	1060	1100	1130	1180	1240
		D	mm	2180	2210	2240	2300	2570	2520	2570	2630
		E		2180	2210	2240	2300	2570	2520	2570	2630
		F		275	315	325	330	335	345	365	365
		G		1680	1695	1705	1705	2005	2015	2040	2045

OFFSHORE EQUIPMENT

海工设备

MOORING SYSTEM | 锚泊定位系统

新一代深远海自升式风电安装运维平台——OY-SEU800 锚泊定位系统
A New Generation of Deep Offshore Jack-up Wind Power Installation, Operation and Maintenance Platform--OY-SEU800 Anchor Positioning System

概述 SUMMARY

锚泊定位系统是用锚和锚索将海上浮式结构物或船舶系留于指定海域，限制外力改变其状态，使其保持在预定位置上的定位方式，如钻井平台、钻井船等在海上的作业。按锚泊定位定位的时间可分为短期锚泊定位和长期锚泊定位。按锚泊线的数目可以分为单点锚泊定位系统、两点锚泊定位系统以及多点锚泊定位系统。

Mooring positioning system is a positioning method used to anchor and moor offshore floating structures or vessels in a designated area of the sea, limiting external forces to change their status and keeping them in a predetermined position, such as drilling platforms and drilling ships in offshore operations. According to the time of mooring positioning, it can be divided into short-term mooring positioning and long-term mooring positioning. According to the number of mooring lines, it can be divided into single-point mooring positioning system, two-point mooring positioning system, and multi-point mooring positioning system.

我国首台兆瓦级漂浮式波浪能发电装置锚泊定位系统
China's first megawatt-scale floating wave energy power generation device uses a mooring positioning system

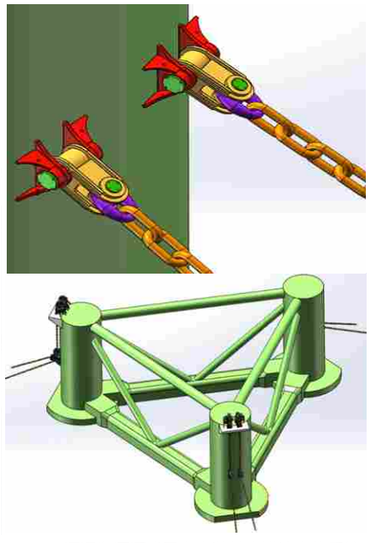

深远海漂浮式风电安装基座锚泊定位系统
Deep-sea floating wind power installation base mooring positioning system.

80T Offshore Positioning Winch
80T海工定位绞车

主要参数：

容绳量：800米@Φ90毫米
额定拉力：
800KN@12米/分钟（中间层）
支持负载：
5650KN（第二层）

Main Parameter:
Drum capacity:800m@Φ90mm
Rated Pull:
800KN@12m/min(middle layer)
Supported load:
5650KN (second layer)

132mm Offshore Positioning Windlass
Φ132链径海工定位锚机

主要参数：

链径：Φ132mm
额定拉力：1500KN@15m/min

Main Parameter:
Chain Diameter: Φ132mm
Rated Pull: 1500KN@15m/min

MARINE CRANE | 海工吊机

南极科考船雪龙号杂物吊
Cranes for the national polar research vessel "Xuelong"

概述 SUMMARY

海工吊机主要是在海洋工程船舶和海洋平台上使用的起重机，是一种海洋上装卸货物和吊运人员的设备，是海洋工程中最重要的生产和安全设备之一，其安全可靠性、可维修性、可抗风性及耐腐蚀性要求很高。它具有起重能力大，操纵方便，耐冲击，制动性能好，安全可靠，装卸货效率高与对货物的适应性好等特点。

Offshore cranes are mainly used on marine engineering vessels and marine platforms. They are equipment used for loading and unloading cargo and lifting personnel on the sea. They are one of the most important production and safety equipment in marine engineering, with high requirements for safety, reliability, maintainability, wind resistance, and corrosion resistance. They have the characteristics of large lifting capacity, convenient operation, impact resistance, good braking performance, high safety and reliability, high cargo handling efficiency, and good adaptability to goods.

中天31风电安装船用液压吊
Hydraulic crane for wind power installation ship for ZHONGTIAN 31.

瓯洋海工风电安装船用折臂吊
Hydraulic knuckle telescopic boom crane for Ouyang offshore

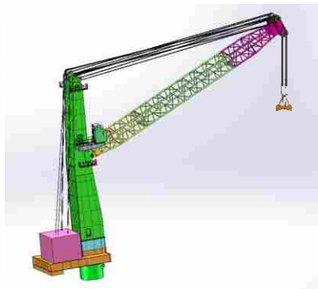

过驳吊
barge crane

BARGE CRANE | 海工过驳吊机

概述 SUMMARY

海工过驳吊机可进行岸与船、船与船之间的装卸作业。自重轻、转盘重心低、稳定性好、回转灵活。可选择配置吊钩或抓斗，是理想的装卸设备。它具有起重能力大，操纵方便，耐冲击，制动性能好，装卸货效率高，对货物的适应性好等特点。其安全可靠性、可维修性、可抗风性及耐腐蚀性要求很高。

Barge crane can perform loading and unloading operations between shore and ship, and between ships. It is lightweight, with a low center of gravity and good stability, allowing for flexible rotation. It can be equipped with hooks or grabs, making them ideal for loading and unloading. It has the characteristics of large lifting capacity, convenient operation, impact resistance, good braking performance, high cargo handling efficiency, and good adaptability to goods. It also has high requirements for safety, reliability, maintainability, wind resistance, and corrosion resistance.

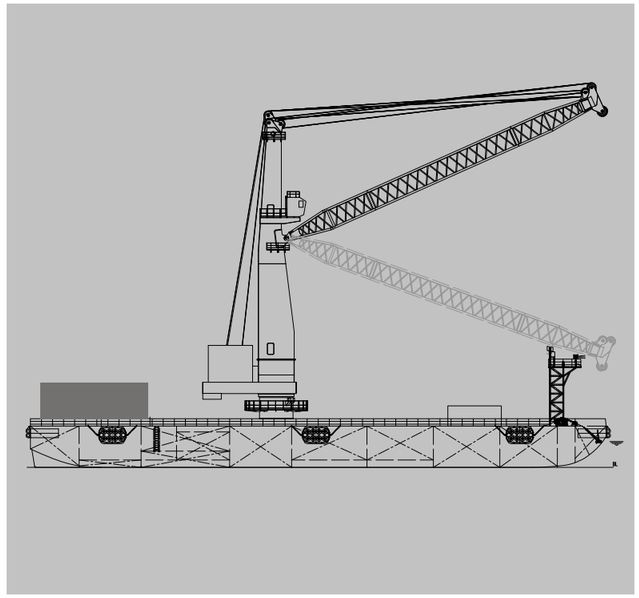

技术参数 Technical parameters

型号		10024	5045	4532	4032
基本参数 Basic data	吊货安全工作载S.W.L	100t	50t/100t	45t/80t	36t
	工作幅度Working Range	24m	45/24m	32/16m	32m
	起升高度Hoisting Height	60m	60m	50m	40m
	起升速度(负载)Hoisting Speed	0 ~ 30±10%m/min	0 ~ 60±10%m/min@50t 0 ~ 30±10%m/min@100t	0 ~ 60±10%m/min@45t 0 ~ 30±10%m/min@80t	0~30±10%m/min
	目转速度Slewing Speed	0 ~ 1.6 ±10%r/min	0~1.1±10%r/min(50t) 0~1.6±10%r/min(100t)	0 ~ 1.1±10%r/min(45t) 0 ~ 1.6 ±10%r/min(80t)	0~1.1 ±10%r/min(50t)
	回转角度Slewing Sector	330°(带限位)	360°	360°	330°（带限位）
	平均交幅时间Average Luffing Time	80s	60s	60s	60s
起升电机参数 Mofor data	钢索规格SWR SPEC	φ42	φ42	φ38	36
	电动机El-mofor	450kWx2	450kWx2	450kWx2	200kWx2
	电制El-duty	690V/50Hz/3Ph	690V/50Hz/3Ph	440V/50Hz/3Ph	440V/50Hz /3Ph
	工作制Duty	S1	S1	S1	S1
变幅电机参数	电动机El-motor	560kW	560kW	520kW	260kW
	电制El-duty	690V/50Hz /3 Ph	690V/50Hz/3 Ph	440V/50Hz /3 Ph	440V/50Hz /3 Ph
	工作制Duty	S1	S1	S1	S1
回转电机参数	电动机El-mofor	160kWx4	160kWx4	132kWx3	90kWx3
	电制El-duty	690V/50Hz/3Ph	690V/50Hz/3Ph	440V/50Hz/3Ph	440V/50Hz/3 Ph
	工作制Dufy	S1	S1	S1	S1
工作条件 Working Condition	设计最大倾角Max.Heel/Trin	±5°/2°	±6°/3°	±5°/2°	±3°/2°
	使用最大倾角Max.Heel/Trim	±3°/2°	±5°/2°	±5°/2°	±3°/2°
	最大风速Wind Speed	≤20m/S	≤20m/S	≤20m/S	≤20m/S
	环境温度Ambienf femperafure	0℃<t<+50℃	-10℃<t<+50℃	0℃<t<+50℃	-20℃<t<+50℃
	区域分类Area Classification	安全区Safe Area	安全区Safe Area	安全区 Safe Area	安全区Safe Area

HYDRAULIC MACHINERY & SYSTEM 油压机器

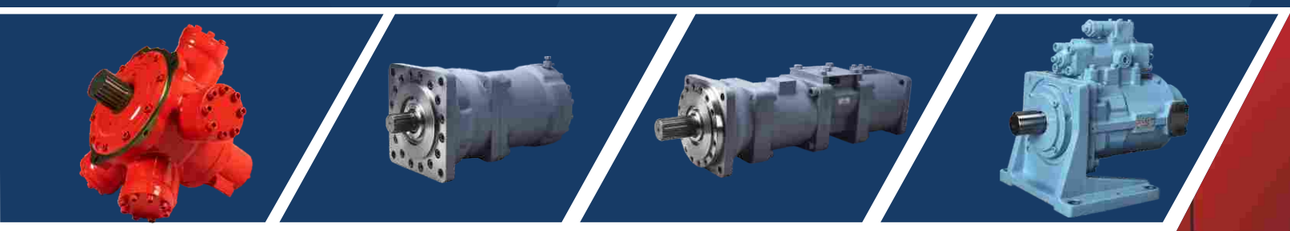

LOW SPEED HIGH TORQUE MOTOR | RMM 低速大扭矩马达

特点 FEATURES

- 小型化且构造简单。
- 彻底减低各项损失，实现高效率，帮助节能。
- 拥有超高的起动能力。
- 双速马达，和专用阀相组合之后，可进行低速/ 高扭矩运转及高速/ 定扭矩运转。
- 专用阀中包含了手动切换阀·无极变速阀。
- 可以承受24.5MPa 的连续运转，拥有极高的可靠性。
- 泄放路的耐压可以达到1.0MPa，使用高压型油封。
- 转动轴可以承受高负重的构造设计。

- Miniaturization and simple construction.
- Save energy by thoroughly reducing various losses and realizing high efficiency.
- High starting capacity.
- Because it is a two speed motor, it can run at low speed / high torque and at high speed / constant torque when combined with special service valve.
- The special service valve includes manual valve and continuous| variable valve.
- It can withstand 24.5mpa continuous operation and has high reliability.
- The pressure resistance of drain oil line can reach 1.0MPa with high pressure oil seal.
- The rotating shaft can bear high load structure design.

IANGSU MASADA-MITSUBISHI HYDRAULICS Rm马达引进日本三菱重工机械系统全套技术、工艺和生产质量过程控制，是在提高了低速高扭矩马达所要求的基本性能、滑动特性及寿命的基础上，实现小型轻量化之后的产品。

RM马达是采用径向柱塞设计，满足了在转速范围内有较高输出扭矩的要求，在低转速时能达到极高的输出;扭矩。其中，变量马达是通过改变凸轮的偏心程度来改变柱塞的工作行程而达到变量的效果。

JIANGSU MASADA-MITSUBISHI HYDRAULICS RM motor introduces MITSUBISHI HEAVY INDUSTRIES MACHINERY SYSTEMS complete technology, procedureand production quality process control, it is a small lightweight product based on improving the basic performance, sliding characteristics and lifetime required by low-speed high torque motor. It has a good design of radial piston, which can meets the requirement of high output torque within the speed range and high output torque at low speed. Multiple displacement motor can change the working stroke of piston by changing the eccentric distance of cam to achieve variable effect.

型式 MODEL

RM [M] - [315] [B] - [20] [R] - [11] [0] [D] - [P] / [ ] 设计编号 Design code

- 变量 Multiple disp.
- 排量3150cc Displacement
- 系列:A和B Series:A and B
- 2.0倍速 Speed ratio
  1. 5/2. 0/2. 5/3. 0/3. 3/4. 0/5. 0
- 组立方式 Assembly type
  R组立、L组立 Assembly R、Assembly L
- 轴端连接方式 Connection type of shaft
- 配管型式 Pipe match type
  O-标准:R,L同向 Standard: R and L are In the same direction
  Y-特殊 R,L相对方向 Special: R is opposite to L
- D-无泄放型（1MPa） No drain type
  N-泄放型（0.1MPa） Drainable type
- P-无级变速阀 Power constant valve
  H-手动阀 Hand valve

变量马达技术参数 SPECIFICATIONS (Multiple Displacement)

型号 Model	排量 Displacement (cc/rev)		工作压力 Pressure (Mpa)		最高输出扭矩 Torque (N.m)		转速 Speed (r /min)			
							大排量 High		小排量 Low	
	大排量 High	小排量 Low	额定 Rated	最大 Max.	大排量 High	小排量 Low	at20. 6Mpa	at24.5Mpa	at20. 6Mpa	at24.5Mpa
RMM-075	745	497	20.6	24.5	2630	1749	5-400	5-200	10-500	10-250
		378				1312			10-600	10-300
		245				790			10-600	10-300
RMM-150	1520	1028			5498	3652	3-300	5-150	10-380	10-190
		766				2763			10-450	10-225
		509				1600			10-450	10-225
RMM-315	3142	1570			11420	5490	3-175	5-100	5-260	10-130
		1256				4570			5-260	10-130
		1047				3800			5-260	10-130
		952				3460			5-260	10-130
RMM-440	4393	2928			15800	10170	3-125	5-75	5-185	10-100
		2196				7380			5-240	10-120
		1460				4690			10-240	10-120

回转方向 ROTATE DIRECTION

从主轴端看 SHAFT END VIEW		进油口 INLET	出油口 OUTLET
L 组立 ASSEMBLY	左回转 C.C.W	R	L
	右回转 C.W	L	R
R 组立 ASSEMBLY	左回转 C.C.W	L	R
	右回转 C.W	R	L

可选配置 OPTION

轴端连接型式 Connection Type Of Shaft	可选阀组 The Valve Options	高压油封 High Pressure Oil Seal
31- 花键 11- 平键 22- 斜轴平键	P- 无级变速阀 H- 手动切换低	N-0.1MPa D-1.0MPa
31- Spline 11- Key 22- Taper Key	Power Constant Valve Hand Valve	

SWASH PLATE TYPE AXIAL PISTON MOTOR | AMC 斜盘式轴向柱塞马达

■ 特点 FEATURES

- 中低速
- 体积小
- 高性能

- Medium-low speed
- Small size
- Good performance

■ 技术参数 SPECIFICATION

类型 Type	排量(cc/rev) Displacement	工作压力 Pressure		最高输出扭矩 Torque(N.m)		转速 Speed(r/min)		估重 Mass(KG)
		额定 Rated	最大 Max.	额定 Rated	最大 Max.	额定 Rated	最大 Max.	
AMC-30A-M2	300	27.5	35	1216	-	1000	1200	147

■ 外形图 EXTERNAL VIEW

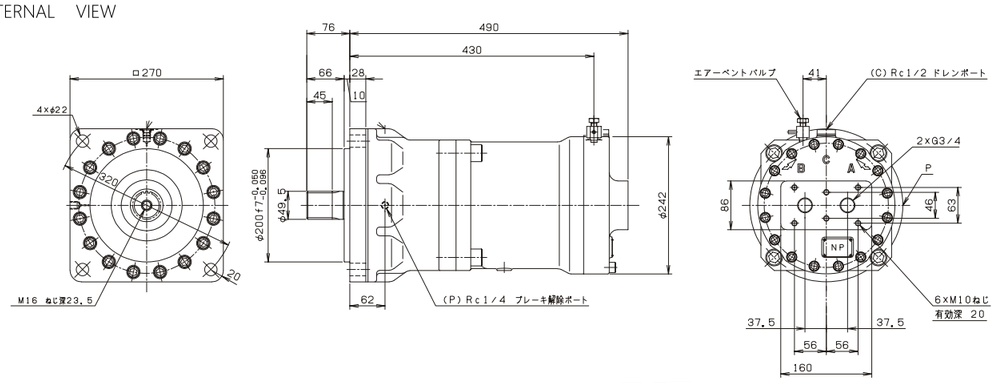

■ 用途 APPLICATIONS

- 施工机械
- 负重运输机械
- 船舶机械
- 产业机械

- Construction machinery
- Cargo loading and transportation machinery
- Ships machinery
- Industrial machinery

■ 原理图 SYMBOL

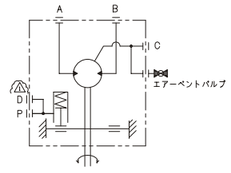

SWASH PLATE TYPE HIGH SPEED AXIAL PISTON MOTOR | TMK 斜盘式高速轴向柱塞马达

■ 特点 FEATURES

- 高压力
- 高功率
- 高速率

- High pressure
- High power
- High speed rate

■ 技术参数 SPECIFICATION

类型 Type	排量(cc/rev) Displacement	工作压力 Pressure		最高输出扭矩 Torque(N.m)		转速 Speed(r/min)		估重 Mass(KG)
		额定 Rated	最大 Max.	额定 Rated	最大 Max.	额定 Rated	最大 Max.	
TMK-33A-M	333/666	20.6	24.5	2182	-	2100	-	371

■ 外形图 EXTERNAL VIEW

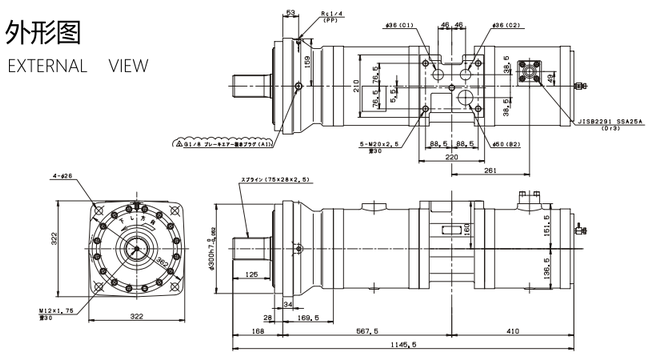

■ 原理图 SYMBOL

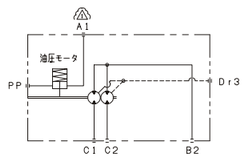

■ 用途 APPLICATIONS

- 船舶机械

- Ships machinery

SWASH PLATE TYPE AXIAL PISTON PUMP | MK 斜盘式轴向柱塞泵

特点 FEATURES

- 重量轻 • Light-weight
- 低噪音 • Low noise
- 高性能 • Good performance
- 高自吸性 • High self-suction ability

技术参数 SPECIFICATION

类型 Type	排量(cc/rev) Displacement	工作压力 Pressure		流量 Delivery m³/s（L/min）	转速 Speed (r/min)	功率 Input (kw)	估重 Mass(KG)
		额定 Rated	最大 Max.				
MKV-16NE	160	35	40	$5.0x10^{-3}$(300)	2000	193	73
MKV-28NE	279	35	40	$7.87x10^{-3}$ (472)	1800	309	125

结构 STRUCTURE

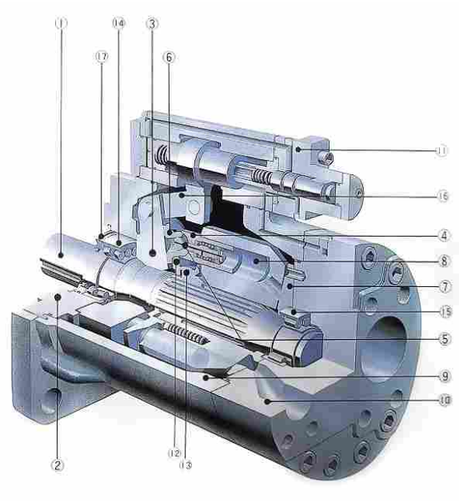

No.	名称	Name	No.	名称	Name
1	传动轴	Shaft	10	底板	End plate
2	前夹板	Front cover	11	控制器	Controller
3	凸轮	Cam	12	保持器	Retainer
4	活塞	Piston	13	固定球	Retainer ball
5	连杆	Con-Rod	14	前轴承	Front bearing
6	滑靴	Slipper	15	后轴承	Rear bearing
7	阀门	valve plate	16	连杆	Rod
8	油缸	Cyl. barrel	17	油封	Oil seal
9	壳体	Casing			

型号/规格 MODEL/SPECIFICAITION

MK V - 23 H - R F A - C10 - Q - 11 S4

型号 Model	定量 / 变量 Fixed/Variable	排量 Disp.	系列符号 Series code	旋转方向 Rotation	安装方法 Mounting method	输出方向 Dischar ging Mode
MK	V	23	H	R	F	A
MK 泵 MK pump	(V) 可变量泵 (V) Variable pump (F) 定量泵 (F) Fixed pump	(08) 85 (11) 117 (16) 160 (23) 229 (28) 279 (33) 333 (55) 552	(H) 标准型 (H) Normal type (K) 特殊型 (D) Both ways discharge (M) 阻燃性液压油对应型 (M) Fire-resistant fuid (*E) 低脉压型 (*E) Low pulse pressure type	从轴端看 (R) 右旋转 Viewed from shaft end (R) Clockwise (right) (L) 左旋转 (L) Anti-clockwise (left)	(F) 法兰连接 (F)Flange Mounting	(A) 单侧输出 (A) One waydischarge (B) 双侧输出 (B) Both ways discharge

控制器 Controller	附属机器 Accessories	轴形状 Shaft	液压油 Hydraulic Fluid
C10	Q	11	S4
(C12) 恒功率控制 (C12) Constant Power Control (P11) 恒压控制 (P11) Constant Pressure Control (CP12) 带恒压控制的恒功率控制 (CP12) Constant Power Control withPressure Cut-of	(O) 无附属机器 (A**) 辅助泵 (O) Without Accessories (A**) Auxiliary Pump ** 是 cc/rev **shows cc/rev (L) 托架 (Q) 辊角指示器 (L) Bracket (Q) Tilting Angle Indicator 标准装备若有多个附属机器就按阿拉伯字母顺序显示 Accessories are listed in alphabetical order.	(11) 平键 (11) Straight Key Shaft (31) 外齿花键 (31)External Spline Shaft	(无)石油系 (S4) 纯磷酸酯 (none) Petroleum based Fluid (S4) Straight PhosphoricAcid Ester (S5) 水甘醇 (S6) 脂肪酸脂 (S5) Water Glycol (S6) Fatty Acid Ester

用途 APPLICATIONS

- 工程机械
- 注塑机
- 船用机械
- 冲压设备
- 混凝土车
- 化工设备
- 制铁机械
- Engineering machinery
- Plastic Injection Machinery
- Ship machinery
- Press machines
- Concrete pumping vehicle
- Chemical equipment
- Iron and steel making machinery

服务网络

SERVICE NETWORK

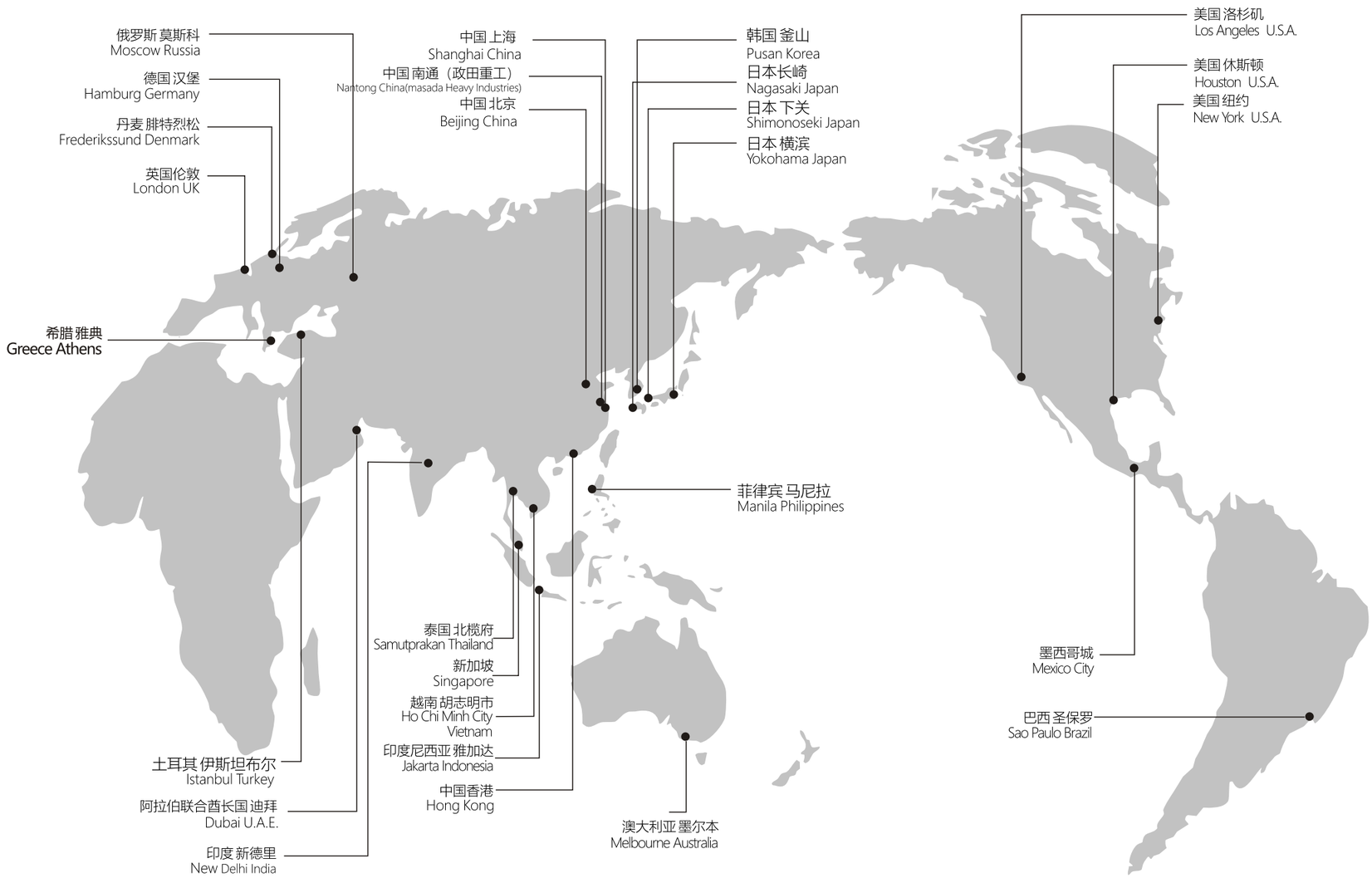

联系窗口 (Contact Window)

中国大陆客户
For Customers in Mainland China

■ 江苏政田重工股份有限公司
Jiangsu Masada Heavy Industries Co.,Ltd.
售后服务
After sales service
电话（Phone）:+86-513-85306835
传真（Fax）:+86-513-85306811
邮箱（E-mail）:aftersales@masada.cn

其它国家和地区（包括中国香港、澳门和台湾）
For Customers in Other Countries and regions
(including Hong kong, Macao and Taiwan)

克令吊/甲板机械/舵机
For deck crane/deck machinery/steering gear

■■ MHI Marine Engineering., Ltd.(Japan)
(电话) Phone:+81-3-3798-5941
(传真) Fax:+81-3-3798-5943
E-mail: afterservice.me@mhi. com

希腊办事处（江苏政田-地中海公司）
Masada-Mediterranean Ltd.(Greece)
(电话)Phone:+30-210-625-56-00
(传真)Fax:+30-210-677-71-71
(邮箱)Email:info@masadamediterranean.com

德国办事处
Masada Office(Germany)
（电话）Phone:+491731588890
（邮箱）Email:B.Waldschmidt@masada.cn

新加坡办事处
Masada Marine & Offshore Pte Ltd
（电话）Phone:+65 6029 3016 6029 3026
（邮箱）Email: Enquiry@masada.com.sg

MHI Office(Licenser)

For desk crane and deck machinery

■ Mitsubishi Heavy Industries Machinery Systems.,Ltd
Phone:+81-78-672-4659
E-mail:M_GUK00102-PARTS@mhi.com

For steering gear

■ Mitsubishi Heavy Industries Marine Machinery & Equipment co.,Ltd.
Nagasaki Shipyard and Machinery Works
Phone:+81-95-828-6060
Fax:+81-95-828-6015

Collaboration Companies for Repair

For Desk crane and deck machinery

■ DAIKAI ENGINEERING PTE LTD(SINGAPORE)
TEL:+65-68632856
E-MAIL:eng@daikai. com

■ KAITATSU TRADING (SHANGHAI) CO., LTD.(CHINA)
TEL:+86-21 6886 9536
E-MAIL:xpding@kaitatsu.com

■ Dalian Venfon Dynamic Technology Co., Ltd.
TEL: +86-411-8479-9000
E-MAIL:mqy@chinawanfang.net

■ HnD Solutions Co.,Ltd(KOREA)
TEL:+82-51-468-2255
E-MAIL:choiym@hndsolutions.kr

■ Collaboration Companies for Repair of deck crane and deck machinery
Adrie Marine Electronics Solutions (India)
TEL: +91-9930-283936
E-MAIL: arena@adriemarine.com

■ KEITOKU MIDDLE EAST L.L.C.(U.A.E)
TEL:+971-4-3479181
E-MAIL: loh@keitoku.com

■ TURBO-TECHNIK REPARATUR-WERFT GmbH & Co.(GERMANY)
TEL: +49-4421-30780
E-MAIL: info@turbotechnik.com

■ FREUDENBERG TECHNISCHE AUSRUSTUNG GmbH(GERMANY)
TEL: +49-4129-955334
E-MAIL: info@freudenberg-cranes.de

■ FAR EAST MARINE SERVICES,INC(U.S.A)
TEL:+1-713-676-2340
E-MAIL: FAREMARINE@aol.com

■ Hydraulic Distributors Pty Ltd.(AUSTRALIA)
TEL:+61-2-4721-5541
E-MAIL: warren@hdaus.com.au

■ UMA MARINE GROUP(INDIA)
TEL:+91-2836 221465
E-MAIL: mahesh@umamarine.com

For steering gear

■ Fuji Trading(Marine)B.V.(Netherlangs)
Phone:+31-10-491-3745
Fax:+31-10-491-3799

■ IHI Marine B.V.(Netherlangs)
Phone:+31-10-411-6406
Fax:+31-10-411-6412

■ Shinsei Engineering Pte.Ltd.(Singapore)
Phone:+65-6383-0368
Fax:+65-6383-0610

■ Daikai Engineering Pte.Ltd.(Singapore)
Phone:+65-6863-2856
Fax:+65-6863-2876

■ Fuji Trading(America)Inc.(U.S.A.)
Phone:+1-410-238-7985
Fax:+1-410-238-7989

■ Far East Marine Service(U.S.A.)
Phone:+1-713-676-2340
Fax:+1-713-676-2461

MHI Main Overseas Office(Marked)&
Overseas Subsidiary Companies(Marked)

■ Beijing Liaison Office
Phone:+86-10-8587-9273

■ MHI (Shanghai)
Phone:+86-21-6841-3030

■ MHI (Hong Kong China)
Phone:+852-2525-5262

■ Taipei Liaison Office (Taiwan China)
Phone:+886-2-2718-8660

■ MHI Singapore
Phone:+65-6305-5200

■ Istanbul Representative
Phone:+90-212- 2696364

■ MHI Europe:Head Office(London)
Phone:+44-20-3480-7500

■ MHI Europe Dusseldorf Representative
Phone:+49-211-61855107

■ Mitsubishi Heavy Industries France
Phone:+33-1-42-67-60-75

■ MHI America: Los Angeles Office
Phone:+1-949-856-8500

■ MHI America: Headquarter (Huston)
Phone:+1-346-308-8800

■ MHI Brazil
Phone:+55-11-3170-9201

■ Mitsubishi Heavy Industries Air-Conditioners Australia, Pty. Ltd
Phone:+61-2-8774-7500

■ Middle East Office
Phone:+971-4-2293329

■ MHI Mexico
Phone:+52-55-5511-4193

www. masada.cn